Standard Detail Drawings

Village of Downers Grove
Public Works Departments
January 1, 2018

REVISIONS

05/07/18 – SWK-08
05/22/18 – PVT-09, PVT-17, PVT-18
03/02/20 – PVT-01, PVT-03, PVT-04, PVT-05, PVT-06, PVT-08, PVT-09, WTR-10, WTR-11

Drawing Index

General Design Details

Drawing No. GEN-01	Frames and Grates – 01/18
Drawing No. GEN-02	Utility Structure Adjustment – 01/18
Drawing No. GEN-04	Typ. Sanitary Replacement with New Utility – 01/18

Pavement Design and Right-of-Way Restoration

Drawing No. PVT-01	Asphalt Approach on Unimproved Roadway w/ Culvert – 03/20
Drawing No. PVT-02	Asphalt Approach on Unimproved Roadway – 01/18
Drawing No. PVT-03	Asphalt Approach with Curb – 03/20
Drawing No. PVT-04	Brick Approach Unimproved Roadway – 03/20
Drawing No. PVT-05	Brick Approach Unimproved Roadway w/ Culvert – 03/20
Drawing No. PVT-06	Brick Approach with Curb – 03/20
Drawing No. PVT-07	Concrete Approach on Unimproved Roadway – 01/18
Drawing No. PVT-08	Concrete Approach on Unimp. Roadway w/ Culvert – 03/20
Drawing No. PVT-09	Concrete Approach with Curb – 03/20
Drawing No. PVT-10	Curb and Gutter – 01/18
Drawing No. PVT-13	Bituminous Improved Roadway Cross-section – 01/18
Drawing No. PVT-15	Bituminous Unimproved Roadway Cross-section – 01/18
Drawing No. PVT-16	Street Opening Bituminous with Conc. Base – 01/18
Drawing No. PVT-17	Street Opening Bituminous – 05/18
Drawing No. PVT-18	Street Opening Brick with Bituminous Base – 05/18
Drawing No. PVT-19	Street Opening Temporary – 01/18
Drawing No. PVT-20	Street Opening Concrete Streets – 01/18
Drawing No. PVT-30	Improved Residential Alley Detail – 01/18
IDOT Standard 442101	Class B Patches
IDOT Standard 606001	Concrete Curb Type B and Combination Concrete Curb and Gutter
IDOT Standard 780001	Typical Pavement Markings

Public Sidewalk

Drawing No. SWK-01	Public Sidewalk – 01/18
Drawing No. SWK-03	ADA Ramps on Non-curbed Streets – 01/18
Drawing No. SWK-08	Downtown Business District Sidewalk Requirements – 05/18
IDOT Standard 424001	Perpendicular Curb Ramps for Sidewalks
IDOT Standard 424006	Diagonal Curb Ramps for Sidewalks
IDOT Standard 424011	Corner Parallel Curb Ramps for Sidewalks
IDOT Standard 424016	Mid-Block Curb Ramps for Sidewalks
IDOT Standard 424021	Depressed Corner for Sidewalks
IDOT Standard 424026	Entrance/Alley Pedestrian Crossings
IDOT Standard 424031	Median Pedestrian Crossings

Storm Drainage System

Drawing No. STM-02	Conflict Manhole – 01/18
Drawing No. STM-03	Outlet Control Structure – 6' – 01/18
Drawing No. STM-09	Sump Pump Air Gap – 01/18

Illinois Urban Manual Standard Drawings:

IUM-514	Rolled Erosion Control Products
IUM-561C1	Inlet Protection Paved Areas – Curb Protection
IUM-561D	Inlet Protection Paved Areas – Drop-In Protection
IUM-620A	Silt Fence Plan
IDOT Standard 280001	Temporary Erosion Control Systems (amended to prohibit straw/hay bales)
IDOT Standard 602001	Catch Basin Type A (amended to prohibit brick masonry/CMU)
IDOT Standard 602011	Catch Basin Type C (amended to prohibit brick masonry/CMU)
IDOT Standard 602301	Inlet – Type A (amended to prohibit brick masonry/CMU)
IDOT Standard 602306	Inlet – Type B (amended to prohibit brick masonry/CMU)
IDOT Standard 602401	Precast Manhole Type A 4' Diameter
IDOT Standard 602601	Precast Reinforced Concrete Flat Slab Top
IDOT Standard 602701	Manhole Steps
IDOT Standard 604001	Frame and Lids Type 1
IDOT Standard 604036	Grate Type 8

Water System

Drawing No. WTR-01	Water Main Connection – 01/18
Drawing No. WTR-02	Water and Sewer Separation Requirements - Horizontal Separation – 01/18
Drawing No. WTR-03	Water and Sewer Separation Requirements - Vertical Separation Above – 01/18
Drawing No. WTR-04	Water and Sewer Separation Requirements -Vertical Separation Below – 01/18
Drawing No. WTR-05	Typical Thrust Block Installation – 01/18
Drawing No. WTR-06	Megalug Mechanical Joint Restraint – 01/18
Drawing No. WTR-07	All Stainless Steel Casing Spacer – 01/18
Drawing No. WTR-08	Water Valve Vault – 01/18
Drawing No. WTR-09	Watermain Pressure Connection – 01/18
Drawing No. WTR-10	Typical Hydrant Installation – 03/20
Drawing No. WTR-11	Typical Tap Service Connection – 03/20
Drawing No. WTR-12	Typ. Water Service Connection from B-Box to House – 01/18

Trees

Drawing No. TRE-01	Parkway Tree Protection Requirements – 01/18
Drawing No. TRE-02	Suitable Parkway Tree Species List – 01/18

Electrical

Drawing No. SLT-01	Light Pole Detail 1 – 01/18
Drawing No. SLT-02	Light Pole Detail 2 – 01/18
Drawing No. SLT-03	Light Pole Detail 3 – 01/18
Drawing No. SLT-04	Light Pole Foundation – 01/18
Drawing No. SLT-05	Cable Splice – 01/18
Drawing No. SLT-06	Pole Base Wiring – 01/18
Drawing No. SLT-07	Overhead Service Drop – 01/18
Drawing No. SLT-08	Street Light Controller Cabinet – 01/18
Drawing No. SLT-09	Electric Diagram for Controller – 01/18
Drawing No. SLT-10	Unit Duct Trench Profile – 01/18
Drawing No. SLT-11	Pole Wiring on New Controller – 01/18
Drawing No. SLT-12	Pole Wiring on Old Controller – 01/18
Drawing No. SLT-13	Ornamental Pole/Light Fixture Style A – 01/18
Drawing No. SLT-14	Ornamental Pole/Light Fixture Style B – 01/18
Drawing No. SLT-15	Ornamental Pole Duplex Receptacle – 01/18

Village of Downers Grove Frame and Grate Selection Procedure

Barrier Curb

- If storm sewer is less than 12" in diameter, use IDOT Type 1 OL (Neenah R-1713 or EJ 1050Z1)
- If storm sewer is equal to or greater than 12" in diameter:
  - use EJW 7045Z 7050T1 7045M1 Set for CBs and inlets
  - use Neenah R-3250-A or EJW 7550Z with Hood for junctions
- If storm sewer is in special drainage area, use custom frame/grate as approved

Mountable or Depressed Curb

- use Neenah R-1713, R-3506-A2, R-3506-B or EJ 1050Z1 **grate must meet ADA requirements in sidewalk or pedestrian areas

Ditches and Non-paved Sags

- Use IDOT Type 8 (Neenah R-4340-B, Neenah R-4342, OR EJ 6527N1)

Junctions (Storm Manholes, Water Valve Vaults)

- Use IDOT Type 1 CL (Neenah R-1713 or EJ 1050Z1)

Note: All closed lids shall be stamped "WATER" or "STORM," and all storm inlets shall be stamped "DUMP NO WASTE, DRAINS TO FRESH WATER" or similar as approved.

N.T.S.	DATE	REVISIONS	DRAWN BY	APPVD BY	STANDARD DETAIL
Village of DOWNERS GROVE FOUNDED IN 1832	02/23/07		J.P.T.	M.D.M.	FRAMES AND GRATES
	03/25/11		S.A.V.	A.J.S.	
	03/01/15		A.J.S.	A.J.S.	
	01/01/17		N.R.H.	J.M.W.	
	01/01/18		N.R.H.	J.M.W.	
	DRAWING NO. GEN-01				
	I:\LIBRARY\DETAILS\GENERAL\GEN-01				

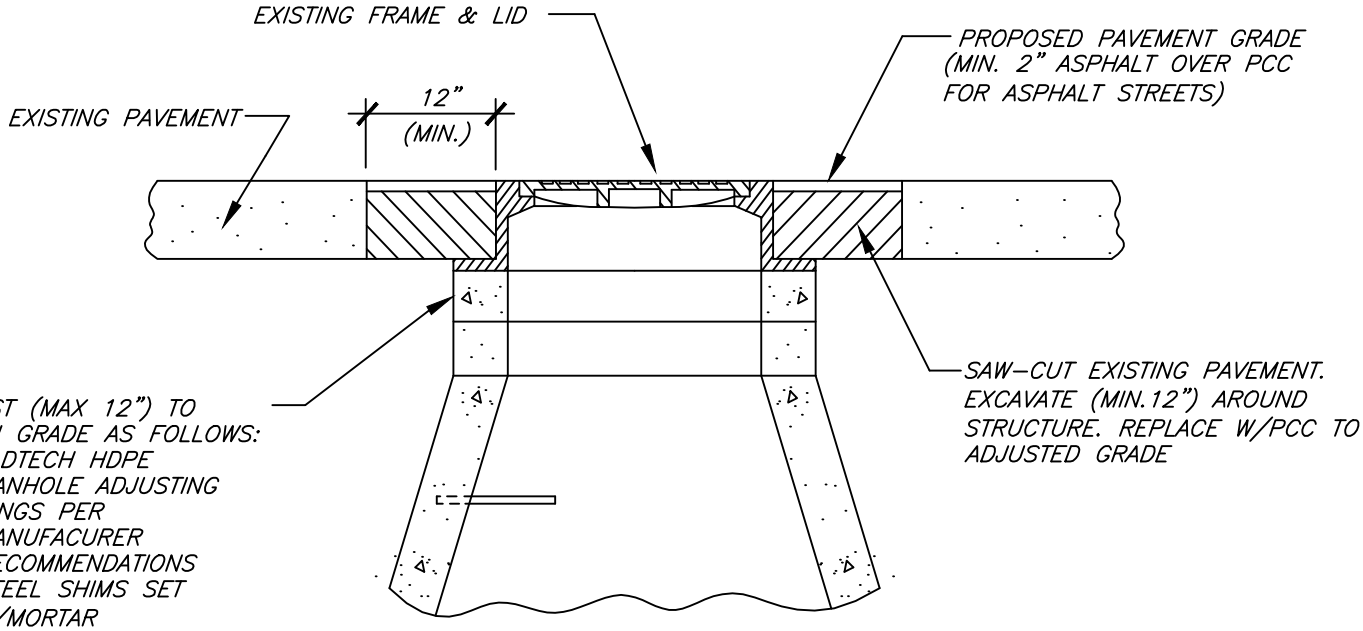

ADJUST (MAX 12") TO FINISH GRADE AS FOLLOWS:

- LADTECH HDPE MANHOLE ADJUSTING RINGS PER MANUFACURER RECOMMENDATIONS
- STEEL SHIMS SET W/MORTAR
- EJ INFRARISER RUBBER ADJUSTMENT RINGS PER MANUFACTURER RECOMMENDATIONS (MAX 3")

BRICK AND MORTAR NOT ALLOWED

NOTES:

1. AFTER STRUCTURE HAS BEEN ADJUSTED AND IF STREET IS OPEN TO TRAFFIC, A TYPE 1 BARRICADE W/FLASHER SHALL BE PLACED AT EACH STRUCTURE.

2. SANITARY MANHOLES SHALL BE ADJUSTED IN ACCORDANCE WITH THE MOST CURRENT DOWNERS GROVE SANITARY DISTRICT SPECIFICATIONS.

N.T.S.	DATE	REVISIONS	DRAWN BY	APPVD BY	STANDARD DETAIL
Village of DOWNERS GROVE FOUNDED IN 1832	06/01/04		R.W.B.	M.D.M.	UTILITY STRUCTURE ADJUSTMENT
	03/25/11		S.A.V.	A.J.S.	
	03/01/15		A.J.S.	A.J.S.	
	01/01/17		N.R.H.	J.M.W.	
	01/01/18		N.R.H.	J.M.W.	
	DRAWING NO. GEN-02				
	I:\LIBRARY\DETAILS\GENERAL\GEN-02				

RECONNECTION OF SANITARY SERVICE WITH EXISTING OR PROPOSED UTILITY
N.T.S.

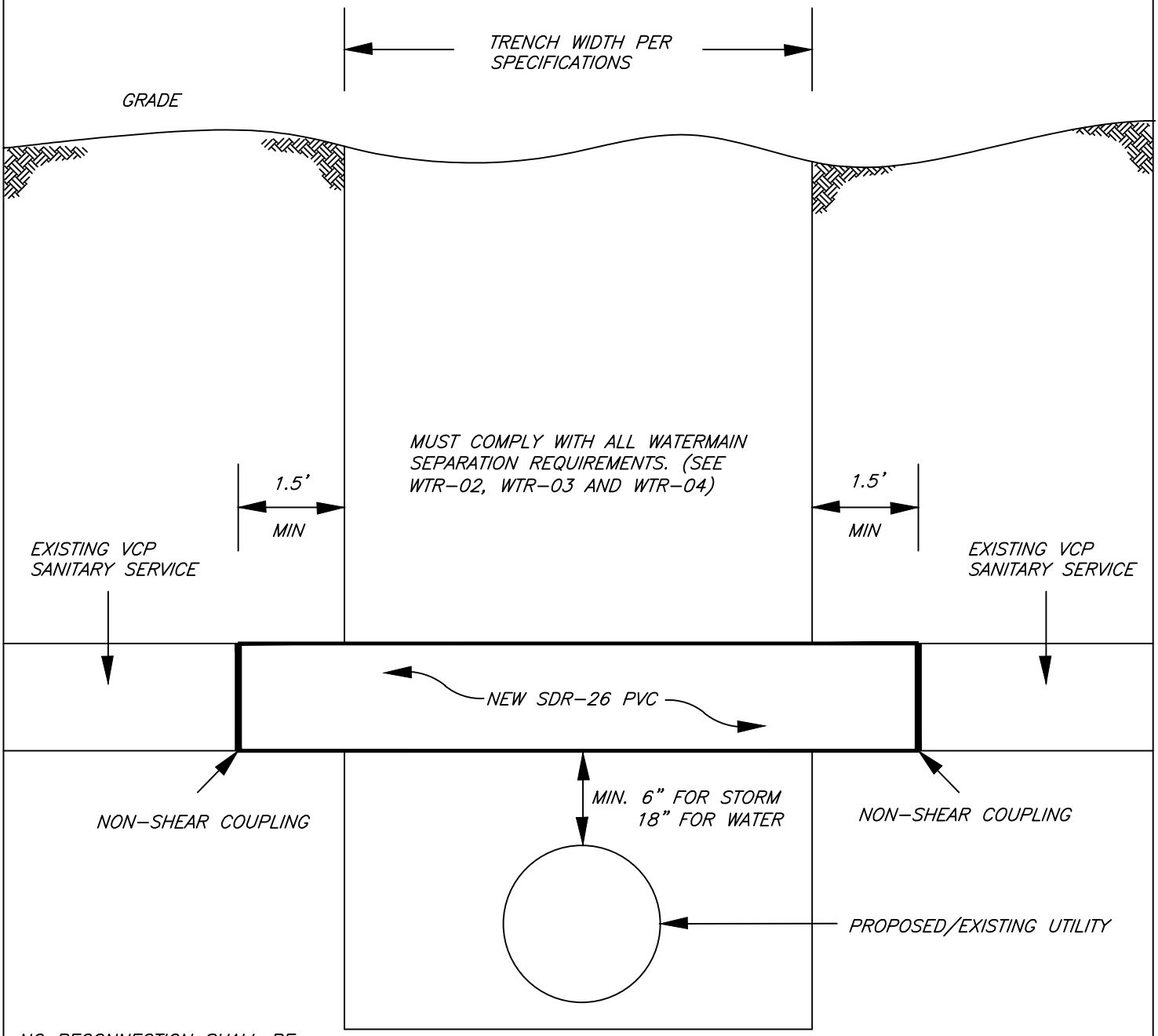

NO RECONNECTION SHALL BE BACKFILLED UNTIL INSPECTED AND APPROVED BY THE DOWNERS GROVE SANITARY DISTRICT. (630-969-0664)

N.T.S.	DATE	REVISIONS	DRAWN BY	APPVD BY	STANDARD DETAIL
Village of DOWNERS GROVE FOUNDED IN 1832	02/20/07		W.J.M.	M.D.M.	TYPICAL SANITARY REPLACEMENT WITH NEW UTILITY
	03/25/11		S.A.V.	A.J.S.	
	03/01/15		A.J.S.	A.J.S.	
	01/01/17		N.R.H.	J.M.W.	
	01/01/18		N.R.H.	J.M.W.	
	DRAWING NO. GEN-04				
	I:\LIBRARY\DETAILS\GENERAL\GEN-04				

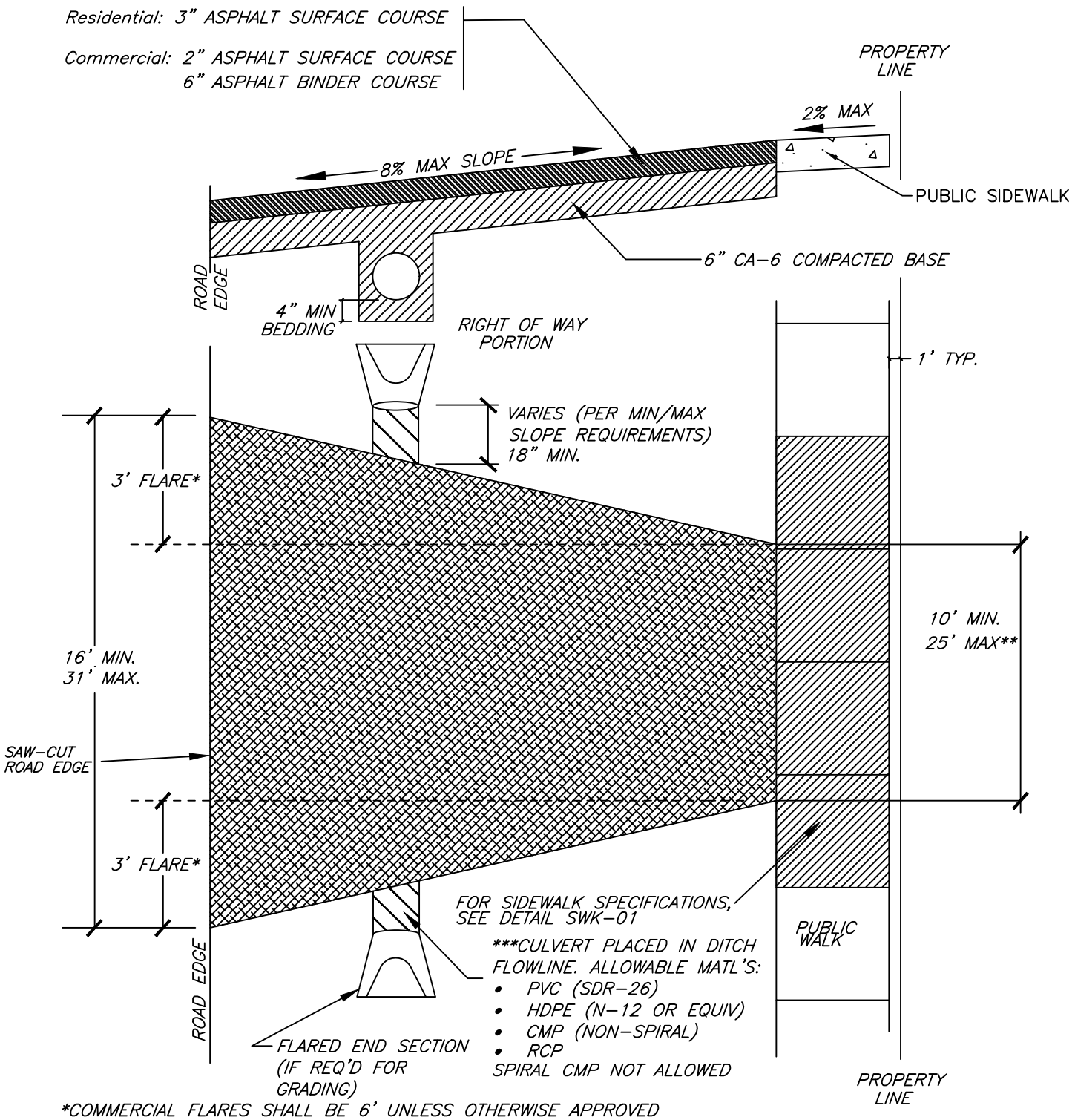

*COMMERCIAL FLARES SHALL BE 6' UNLESS OTHERWISE APPROVED
**COMMERCIAL MAX WIDTH AT ROW LINE IS 40' UNLESS OTHERWISE APPROVED
***CULVERT MUST BE PLACED TO MAINTAIN SLOPE OF EXISTING DITCHLINE

N.T.S.	DATE	REVISIONS	DRAWN BY	APPVD BY	STANDARD DETAIL
Village of DOWNERS GROVE FOUNDED IN 1832	03/02/20		N.R.H.	J.M.W.	ASPHALT APPROACH ON UNIMPROVED ROADWAY WITH CULVERT
	DRAWING NO. PVT-01				
	I:\LIBRARY\DETAILS\PAVEMENT\PVT-01				

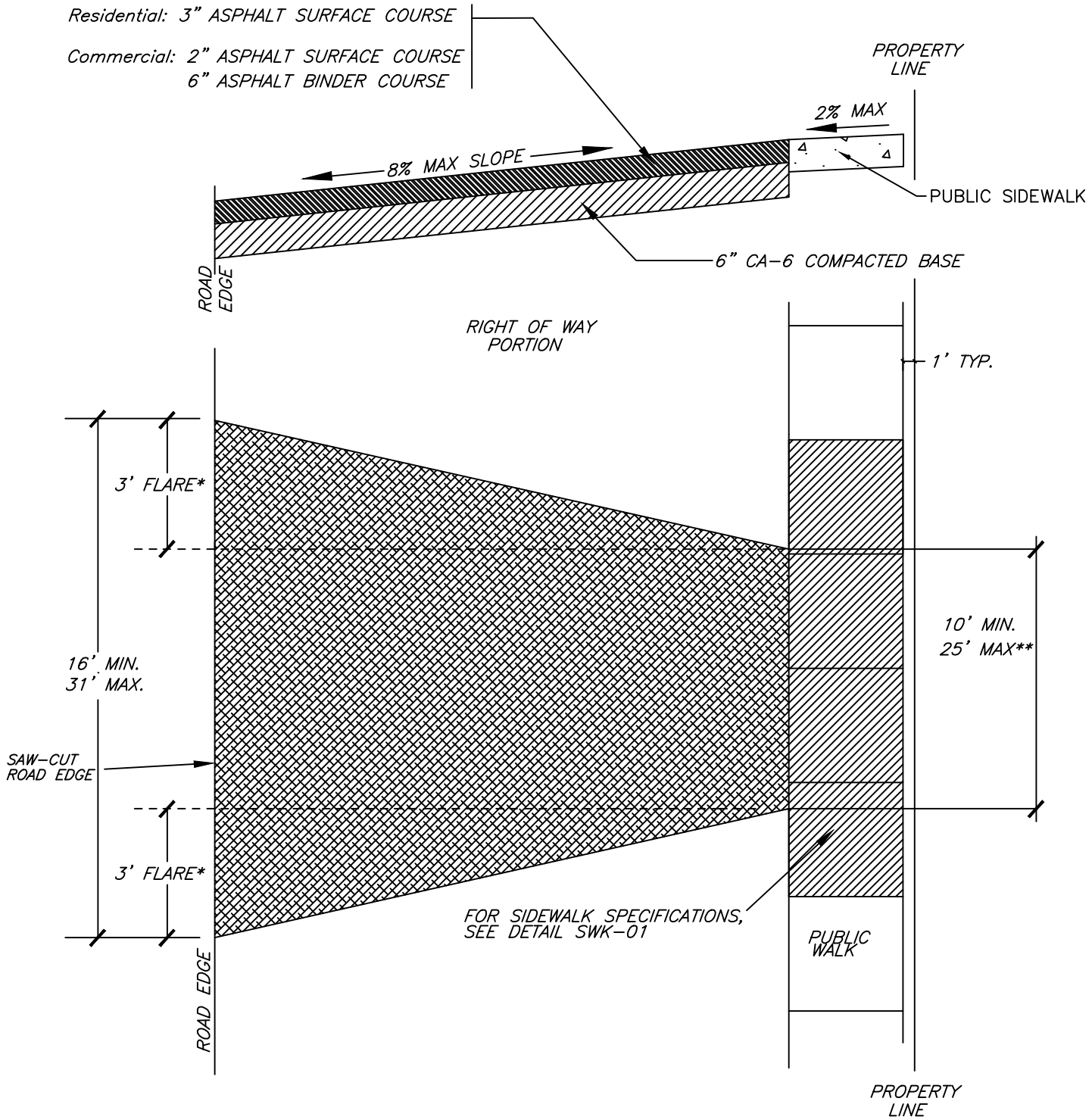

*COMMERCIAL FLARES SHALL BE 6' UNLESS OTHERWISE APPROVED
**COMMERCIAL MAX WIDTH AT ROW LINE IS 40' UNLESS OTHERWISE APPROVED

N.T.S.	DATE	REVISIONS	DRAWN BY	APPVD BY	STANDARD DETAIL
Village of DOWNERS GROVE FOUNDED IN 1832	11/07/14		S.A.V.	A.J.S.	ASPHALT APPROACH ON UNIMPROVED ROADWAY
	03/01/15		A.J.S.	A.J.S.	
	01/01/17		N.R.H.	J.M.W.	
	01/01/18		N.R.H.	J.M.W.	
	DRAWING NO. PVT-02				
	I:\LIBRARY\DETAILS\PAVEMENT\PVT-02				

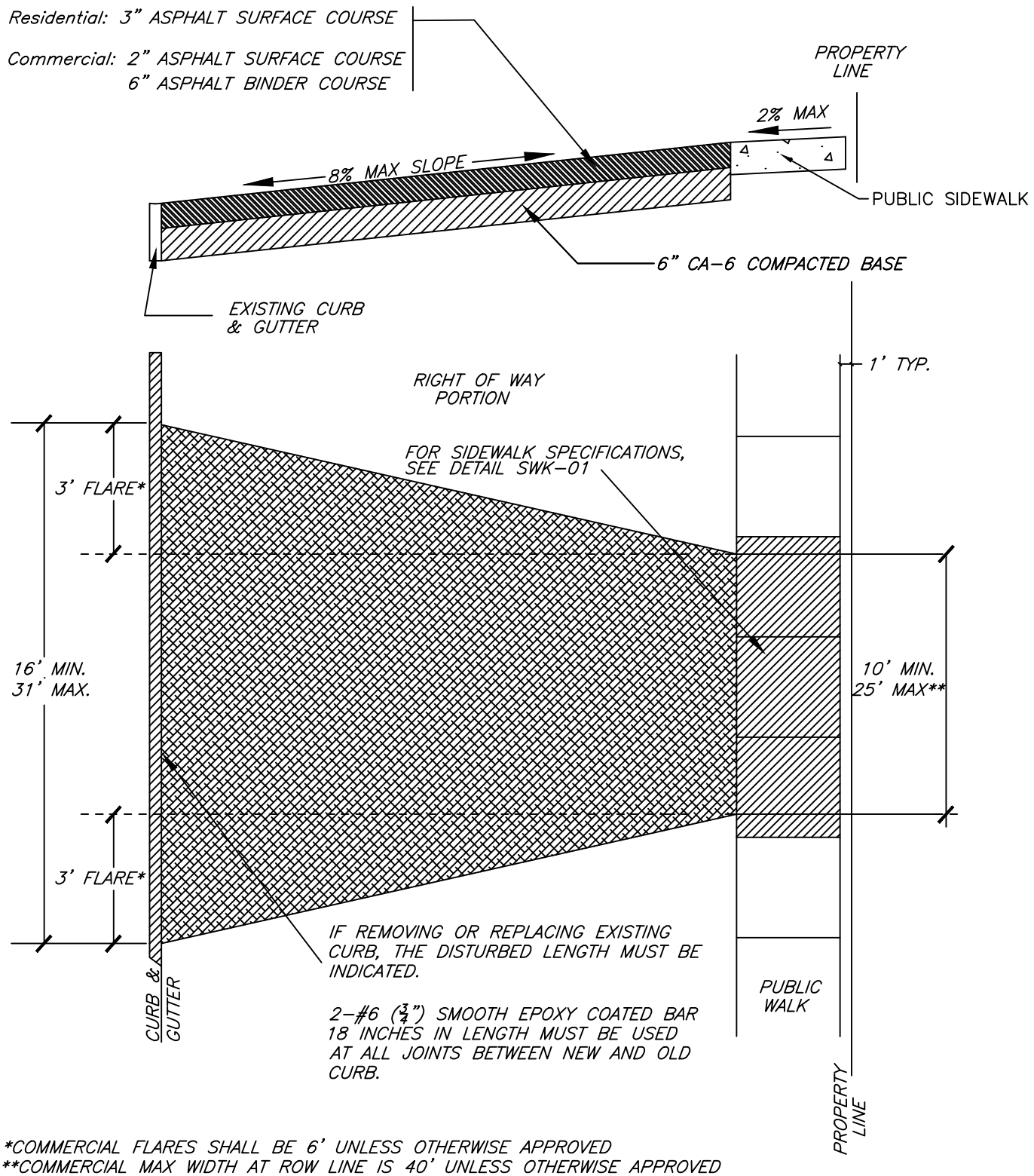

*COMMERCIAL FLARES SHALL BE 6' UNLESS OTHERWISE APPROVED
**COMMERCIAL MAX WIDTH AT ROW LINE IS 40' UNLESS OTHERWISE APPROVED

N.T.S.	DATE	REVISIONS	DRAWN BY	APPVD BY	STANDARD DETAIL
Village of DOWNERS GROVE FOUNDED IN 1832	01/01/19		N.R.H.	J.M.W.	ASPHALT APPROACH WITH CURB
	DRAWING NO. PVT-03				
	I:\LIBRARY\DETAILS\PAVEMENT\PVT-03				

*ENCROACHMENT LICENSE REQUIRED FOR PAVERS LOCATED IN THE PUBLIC RIGHT OF WAY

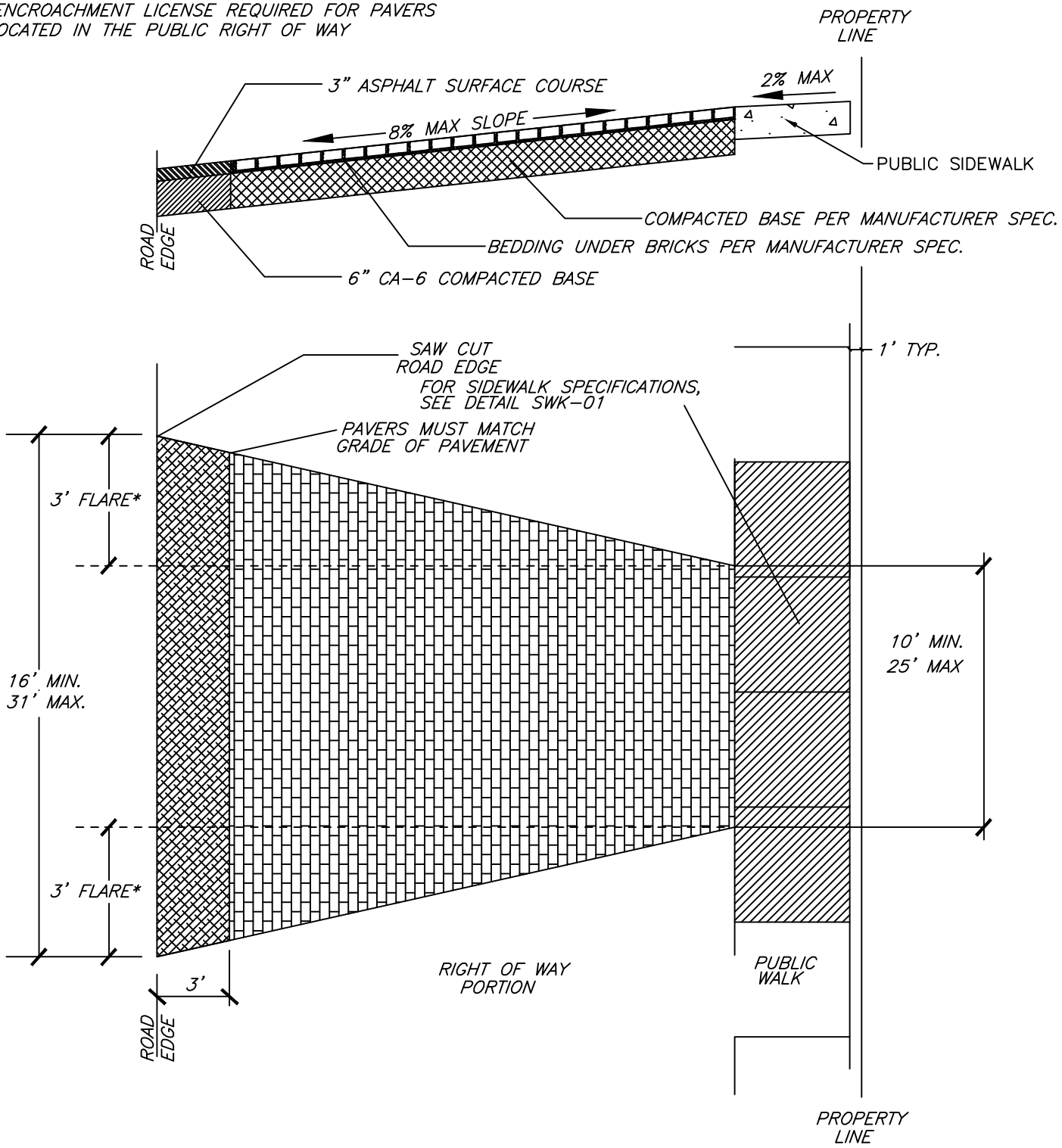

N.T.S.	DATE	REVISIONS	DRAWN BY	APPVD BY	STANDARD DETAIL
	03/02/20		N.R.H.	J.M.W.	BRICK APPROACH UNIMPROVED ROADWAY
	DRAWING NO. PVT-04				
	I:\LIBRARY\DETAILS\PAVEMENT\PVT-04				

Village of DOWNERS GROVE FOUNDED IN 1832

*ENCROACHMENT LICENSE REQUIRED FOR PAVERS LOCATED IN THE PUBLIC RIGHT OF WAY

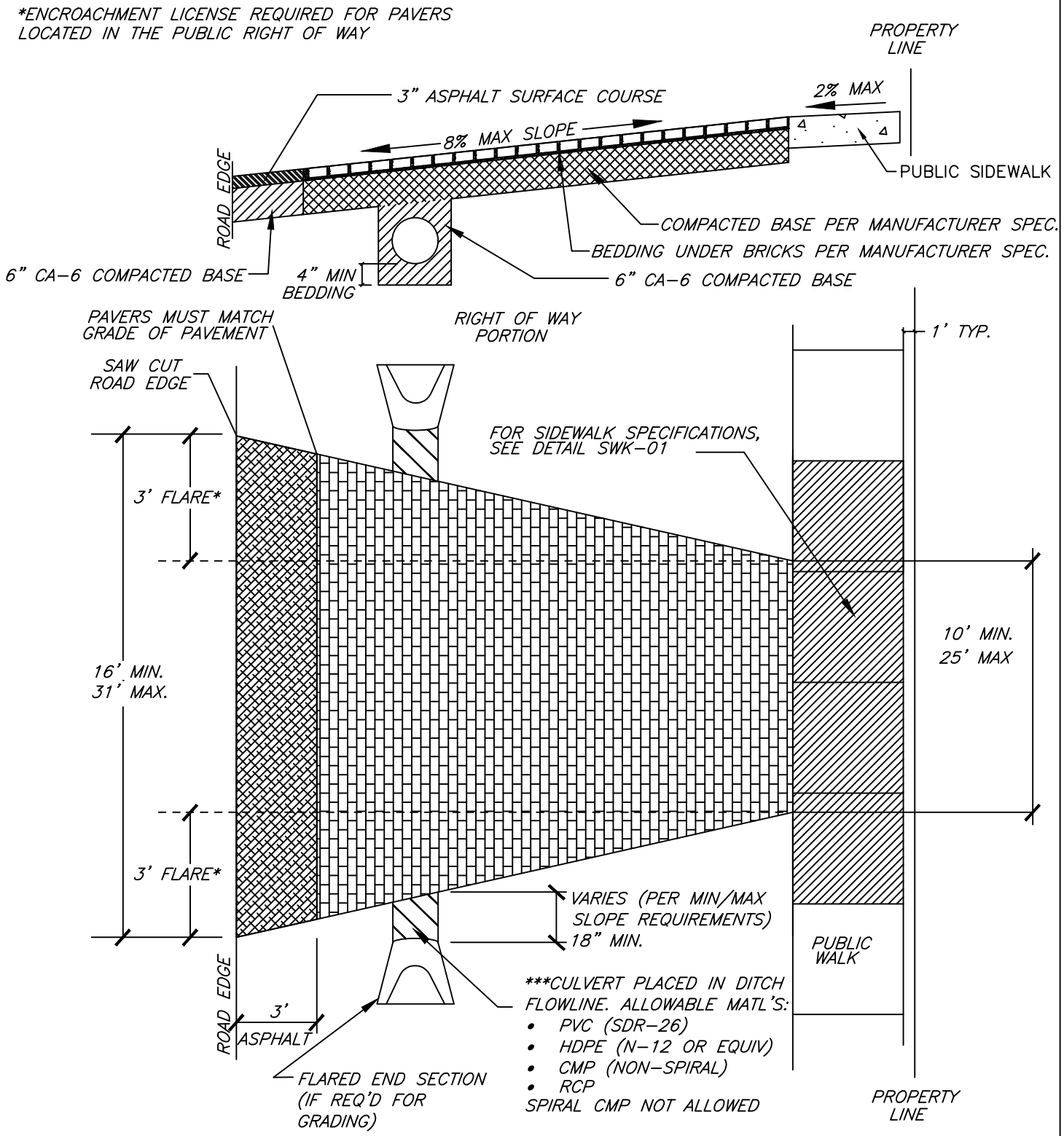

***CULVERT MUST BE PLACED TO MAINTAIN SLOPE OF EXISTING DITCHLINE

N.T.S.	DATE	REVISIONS	DRAWN BY	APPVD BY	STANDARD DETAIL
Village of DOWNERS GROVE FOUNDED IN 1832	03/02/20		N.R.H.	J.M.W.	BRICK APPROACH UNIMPROVED ROADWAY WITH CULVERT
	DRAWING NO. PVT-05				
	I:\LIBRARY\DETAILS\PAVEMENT\PVT-05				

*ENCROACHMENT LICENSE REQUIRED FOR PAVERS LOCATED IN THE PUBLIC RIGHT OF WAY

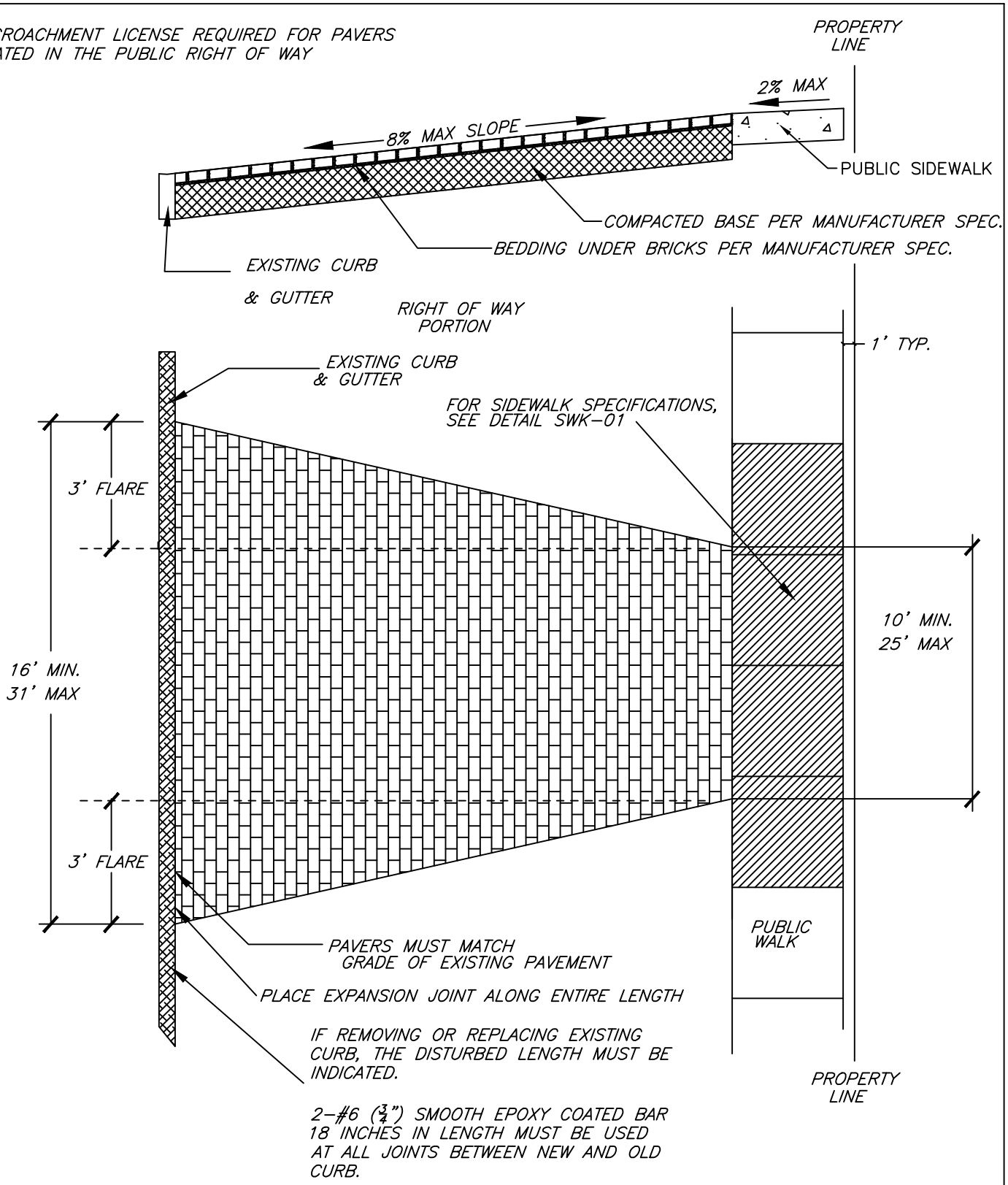

N.T.S.	DATE	REVISIONS	DRAWN BY	APPVD BY	STANDARD DETAIL
Village of DOWNERS GROVE FOUNDED IN 1832	03/02/20		N.R.H.	J.M.W.	BRICK APPROACH WITH CURB
	DRAWING NO. PVT-06				
	I:\LIBRARY\DETAILS\PAVEMENT\PVT-06				

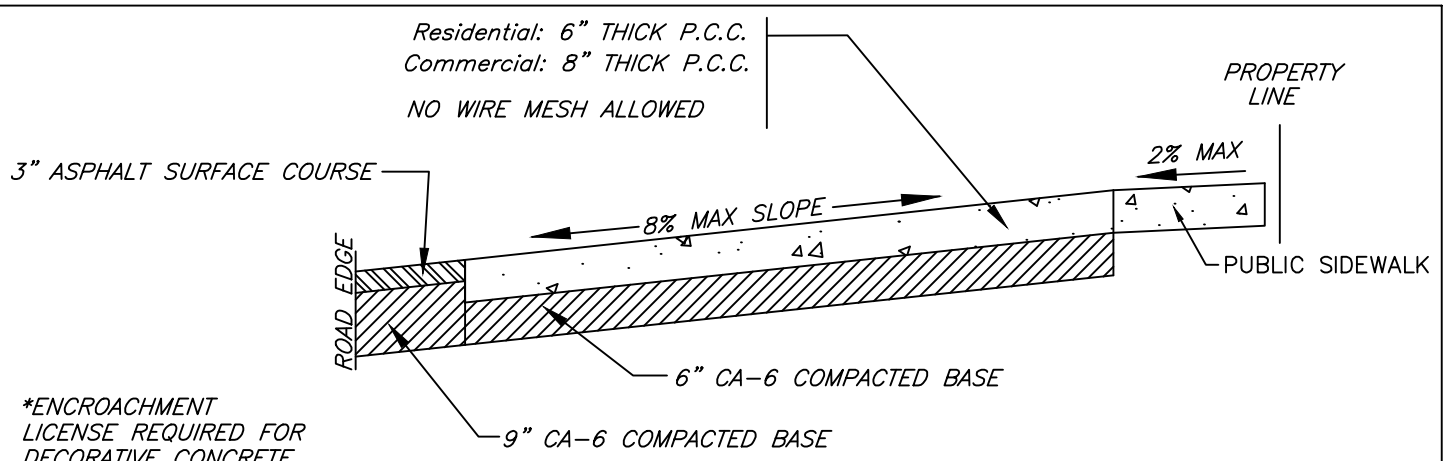

*ENCROACHMENT LICENSE REQUIRED FOR DECORATIVE CONCRETE LOCATED IN THE PUBLIC RIGHT OF WAY

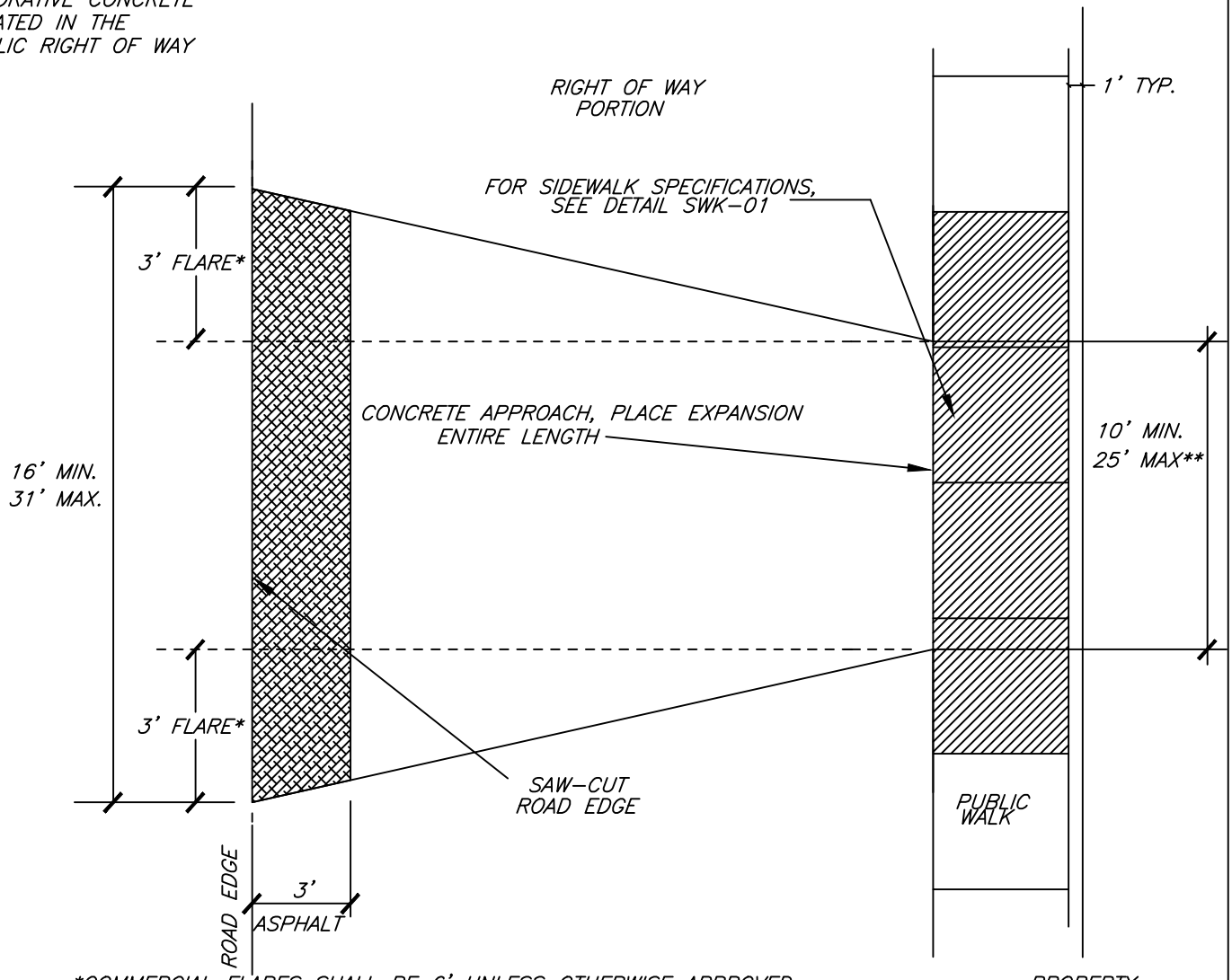

*COMMERCIAL FLARES SHALL BE 6' UNLESS OTHERWISE APPROVED
**COMMERCIAL MAX WIDTH AT ROW LINE IS 40' UNLESS OTHERWISE APPROVED

N.T.S.	DATE	REVISIONS	DRAWN BY	APPVD BY	STANDARD DETAIL
Village of DOWNERS GROVE FOUNDED IN 1832	03/25/11		S.A.V.	A.J.S.	CONCRETE APPROACH ON UNIMPROVED ROADWAY
	05/21/14		S.A.V.	A.J.S.	
	03/01/15		A.J.S.	A.J.S.	
	01/01/17		N.R.H.	J.M.W	
	01/01/18		N.R.H.	J.M.W	
	DRAWING NO. PVT-07				
	I:\LIBRARY\DETAILS\PAVEMENT\PVT-07				

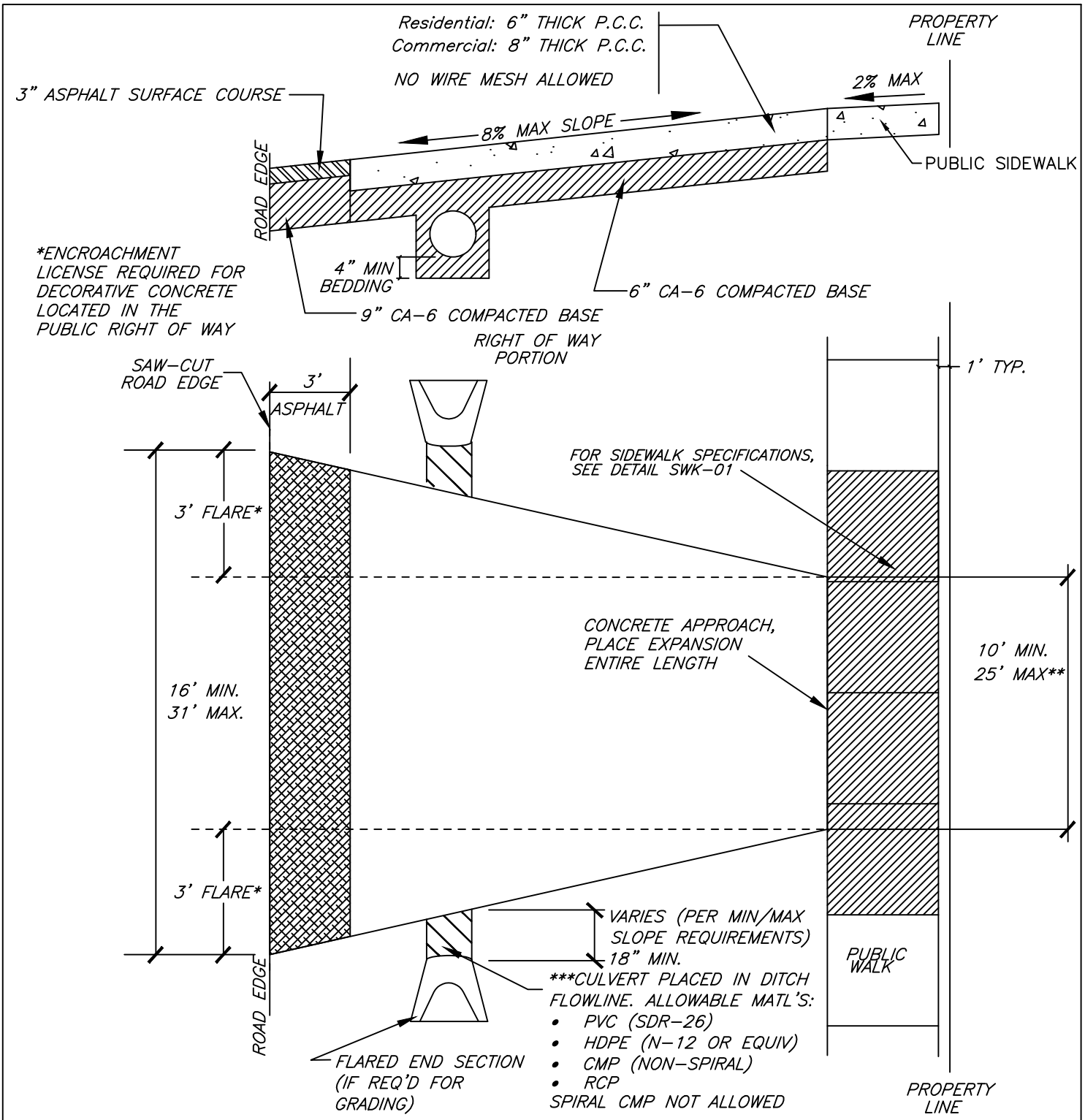

*COMMERCIAL FLARES SHALL BE 6' UNLESS OTHERWISE APPROVED
**COMMERCIAL MAX WIDTH AT ROW LINE IS 40' UNLESS OTHERWISE APPROVED
***CULVERT MUST BE PLACED TO MAINTAIN SLOPE OF EXISTING DITCHLINE

N.T.S.	DATE	REVISIONS	DRAWN BY	APPVD BY	STANDARD DETAIL
Village of DOWNERS GROVE FOUNDED IN 1832	03/02/20		N.R.H.	J.M.W.	CONCRETE APPROACH ON UNIMPROVED ROADWAY WITH CULVERT
	DRAWING NO. PVT-08				
	I:\LIBRARY\DETAILS\PAVEMENT\PVT-08				

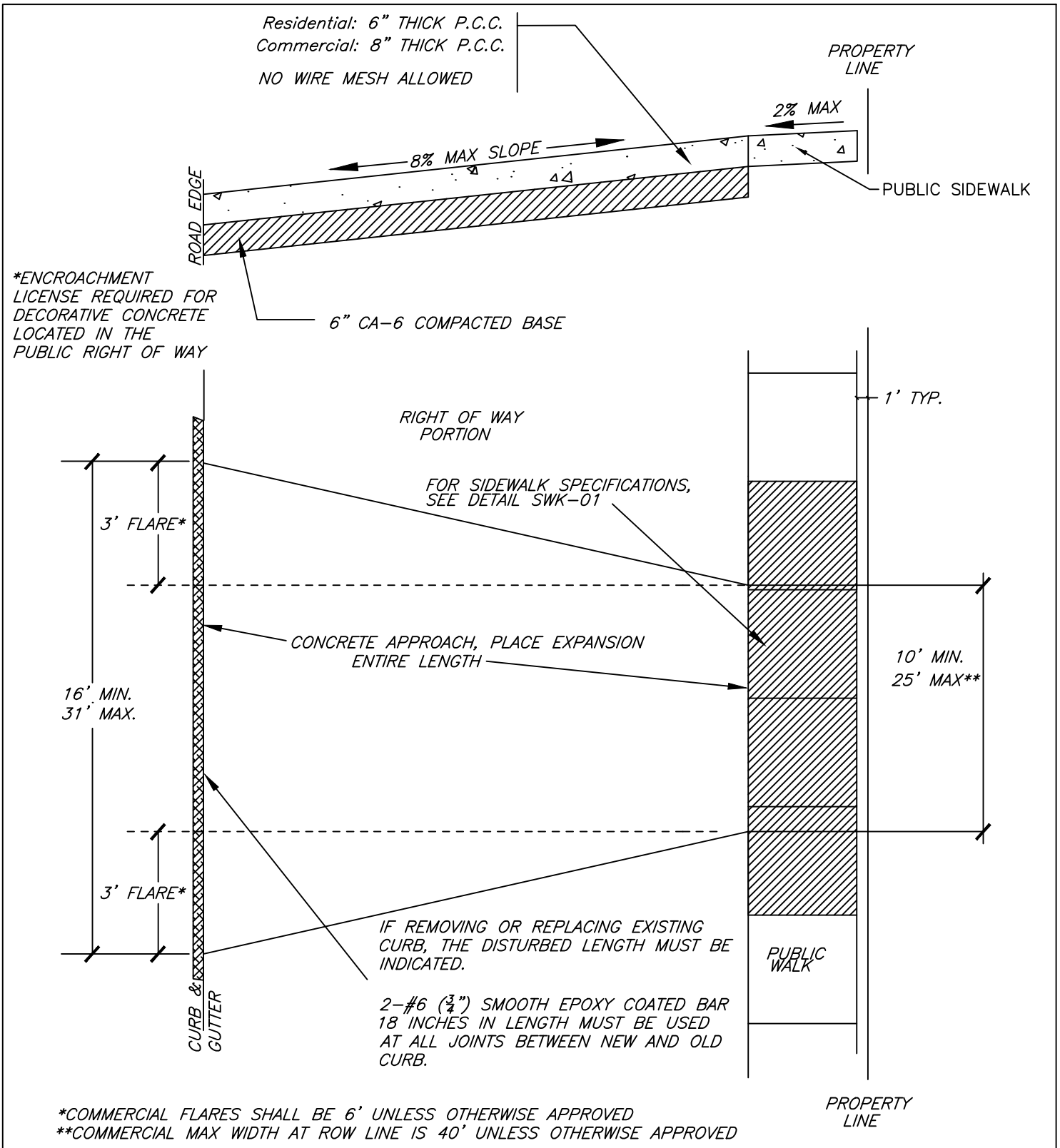

*COMMERCIAL FLARES SHALL BE 6' UNLESS OTHERWISE APPROVED
**COMMERCIAL MAX WIDTH AT ROW LINE IS 40' UNLESS OTHERWISE APPROVED

N.T.S.	DATE	REVISIONS	DRAWN BY	APPVD BY	STANDARD DETAIL
Village of DOWNERS GROVE FOUNDED IN 1832	03/02/20		N.R.H.	J.M.W.	CONCRETE APPROACH WITH CURB
	DRAWING NO. PVT-09				
	I:\LIBRARY\DETAILS\PAVEMENT\PVT-09				

JOINT SPACING ON CENTERS:

15' FOR CONTRACTIONS
90' FOR EXPANSION

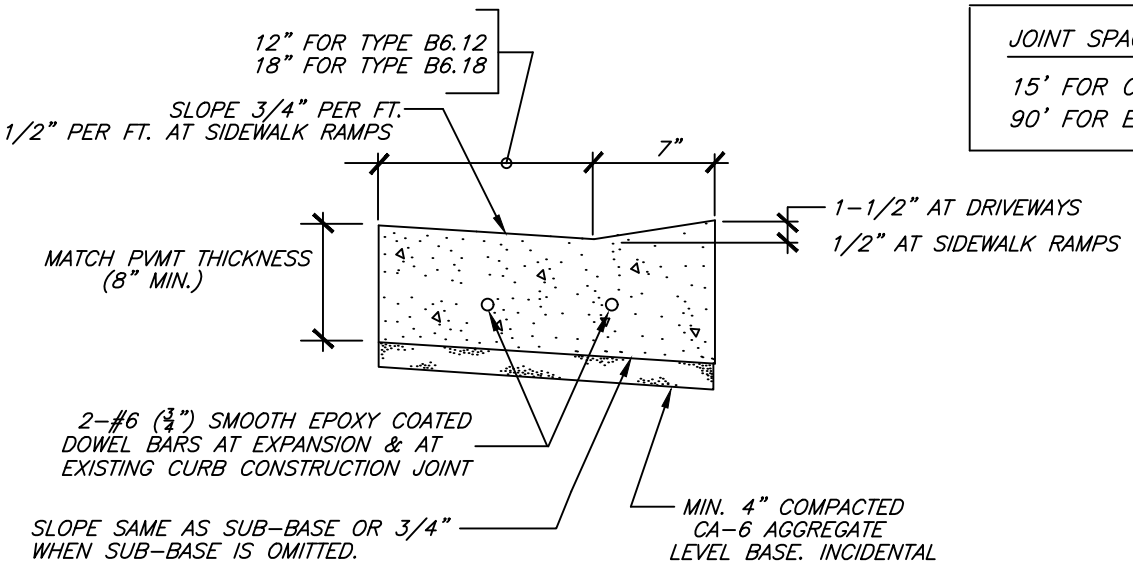

DEPRESSED CURB

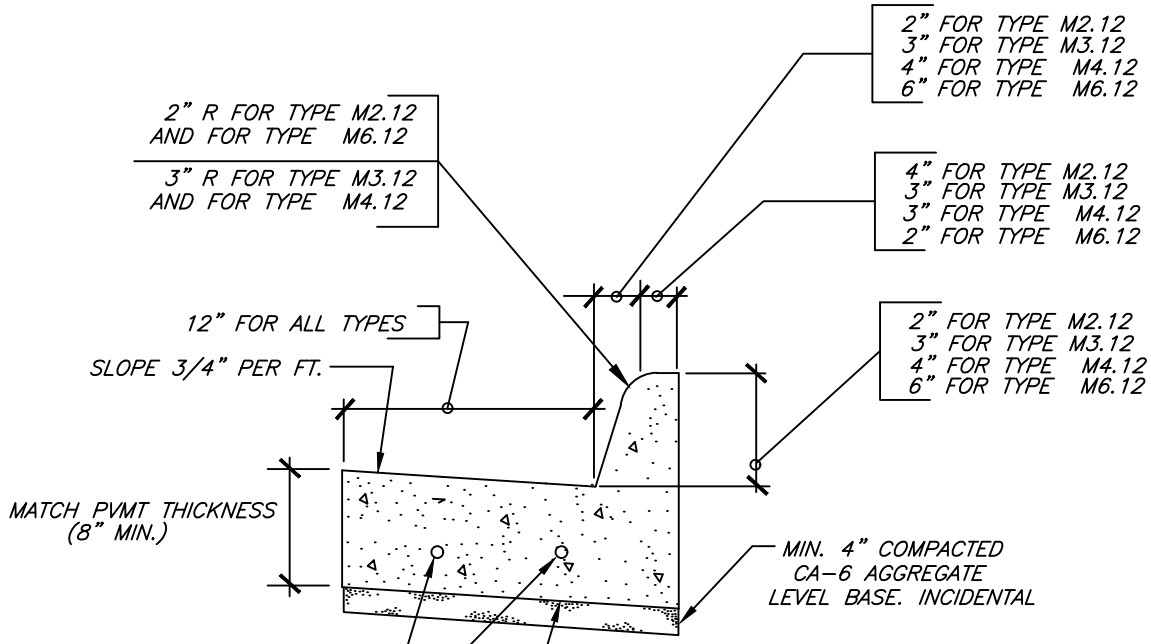

*NOTE: MUST MEET ALL REQUIREMENTS OF THE IDOT STANDARD SPECIFICATIONS FOR ROAD AND BRIDGE CONSTRUCTION, AND IDOT STANDARD DETAIL 606001-06, EXCEPT AS MODIFIED HEREIN

MOUNTABLE OR BARRIER CURB

N.T.S.	DATE	REVISIONS	DRAWN BY	APPVD BY	STANDARD DETAIL
Village of DOWNERS GROVE FOUNDED IN 1832	02/20/07		J.M.L.	M.D.M.	CURB AND GUTTER
	03/25/11		S.A.V.	A.J.S.	
	03/01/15		A.J.S.	A.J.S.	
	01/01/17		N.R.H.	J.M.W.	
	01/01/18		N.R.H.	J.M.W.	
	DRAWING NO. PVT-10				
	I:\LIBRARY\DETAILS\PAVEMENT\PVT-10				

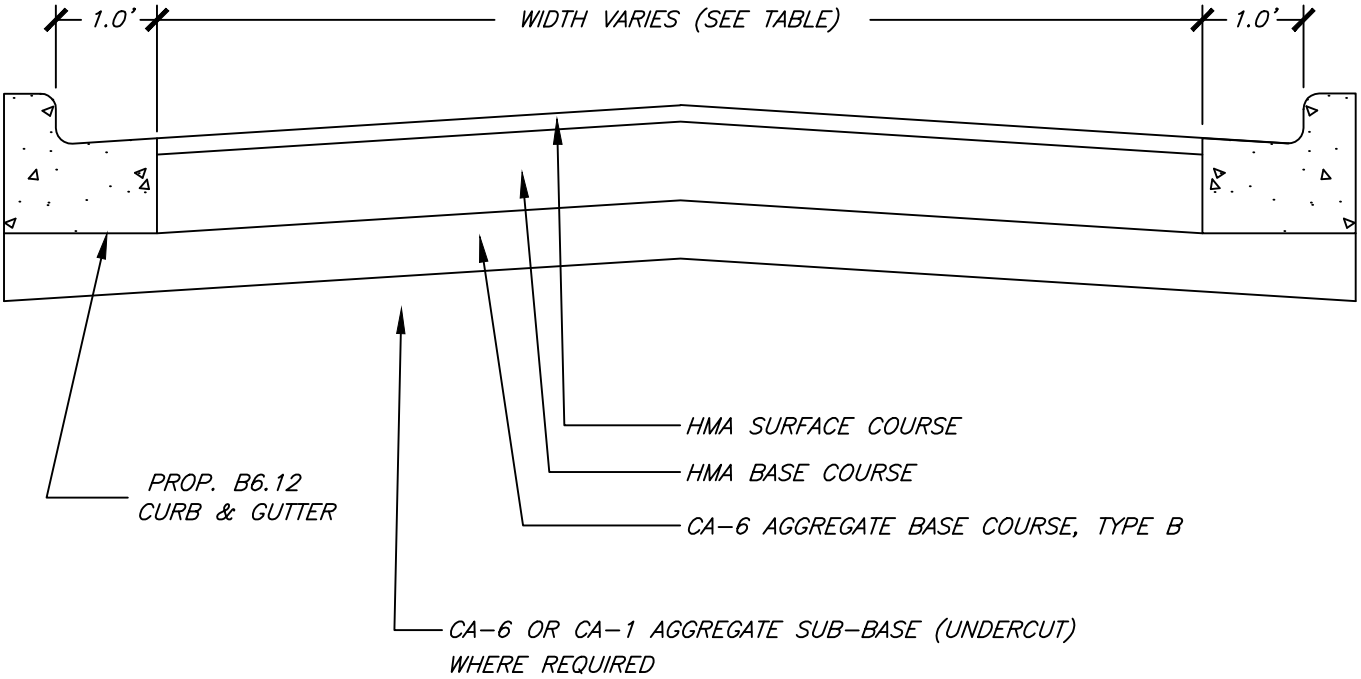

	ARTERIAL STREETS	COLLECTOR STREETS	RESIDENTIAL STREETS
PAVEMENT WIDTH	60'	36'	28'
HMA SURFACE COURSE	2.5"	2"	2"
HMA BASE COURSE	10"	8"	6"
AGG. BASE COURSE	6"	6"	6"
AGG. SUB-BASE (UNDERCUT)	0 TO 24" AS DETERMINED BY ENGINEER	0 TO 24" AS DETERMINED BY ENGINEER	0 TO 24" AS DETERMINED BY ENGINEER

N.T.S.	DATE	REVISIONS	DRAWN BY	APPVD BY	STANDARD DETAIL
Village of DOWNERS GROVE FOUNDED IN 1832	02/20/07		J.M.L.	M.D.M.	BITUMINOUS IMPROVED ROADWAY
	03/25/11		S.A.V.	A.J.S.	
	03/01/15		A.J.S.	A.J.S.	
	01/01/17		N.R.H.	J.M.W.	
	01/01/18		N.R.H.	J.M.W.	
	DRAWING NO. PVT-13				
	I:\LIBRARY\DETAILS\PAVEMENT\PVT-13				

P.C.C. SHOULDER

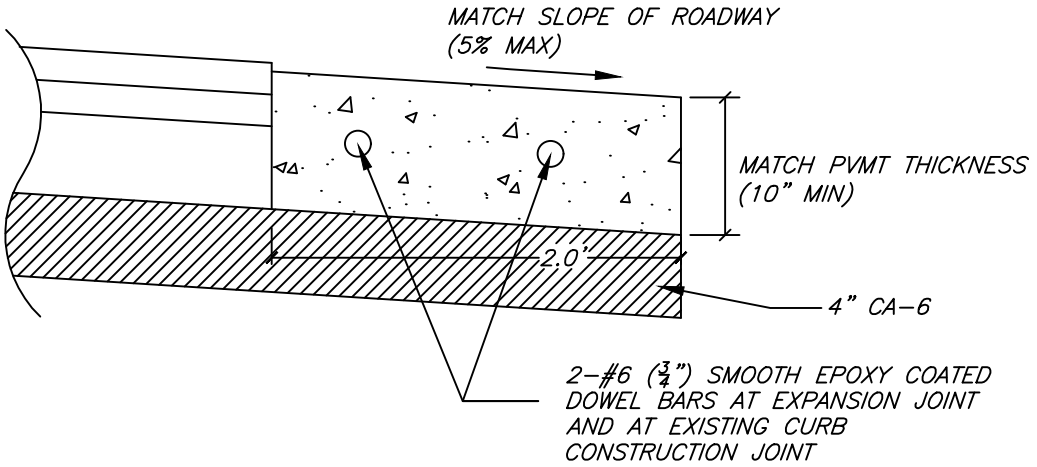

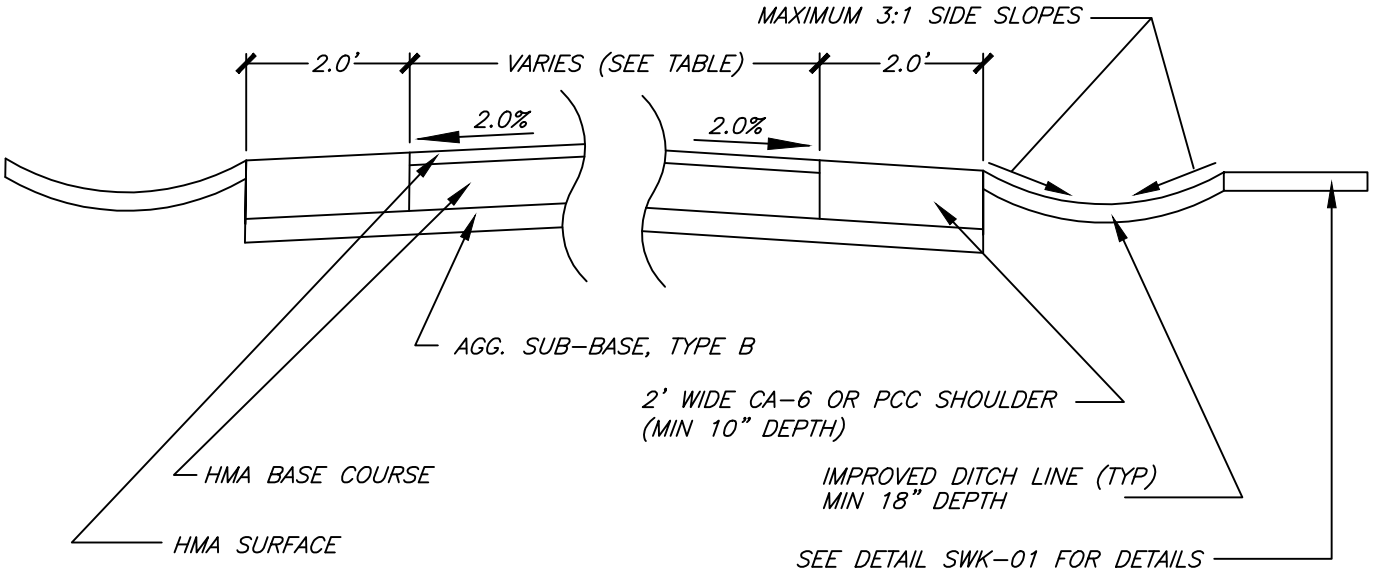

	ARTERIAL STREETS	COLLECTOR STREETS	RESIDENTIAL STREETS
PAVEMENT WIDTH	60'	36'	28'
HMA SURFACE COURSE	2.5"	2"	2"
HMA BASE COURSE	10"	8"	6"
AGG. BASE COURSE	6"	6"	6"
AGG. SUB-BASE (UNDERCUT)	0 TO 24" AS DETERMINED BY ENGINEER	0 TO 24" AS DETERMINED BY ENGINEER	0 TO 24" AS DETERMINED BY ENGINEER

N.T.S.	DATE	REVISIONS	DRAWN BY	APPVD BY	STANDARD DETAIL
Village of DOWNERS GROVE FOUNDED IN 1832	02/20/07		J.M.L.	M.D.M.	BITUMINOUS UNIMPROVED ROADWAY
	03/25/11		S.A.V.	A.J.S.	
	03/01/15		A.J.S.	A.J.S.	
	01/01/17		N.R.H.	J.M.W.	
	01/01/18		N.R.H.	J.M.W.	
	DRAWING NO. PVT-15				
	I:\LIBRARY\DETAILS\PAVEMENT\PVT-15				

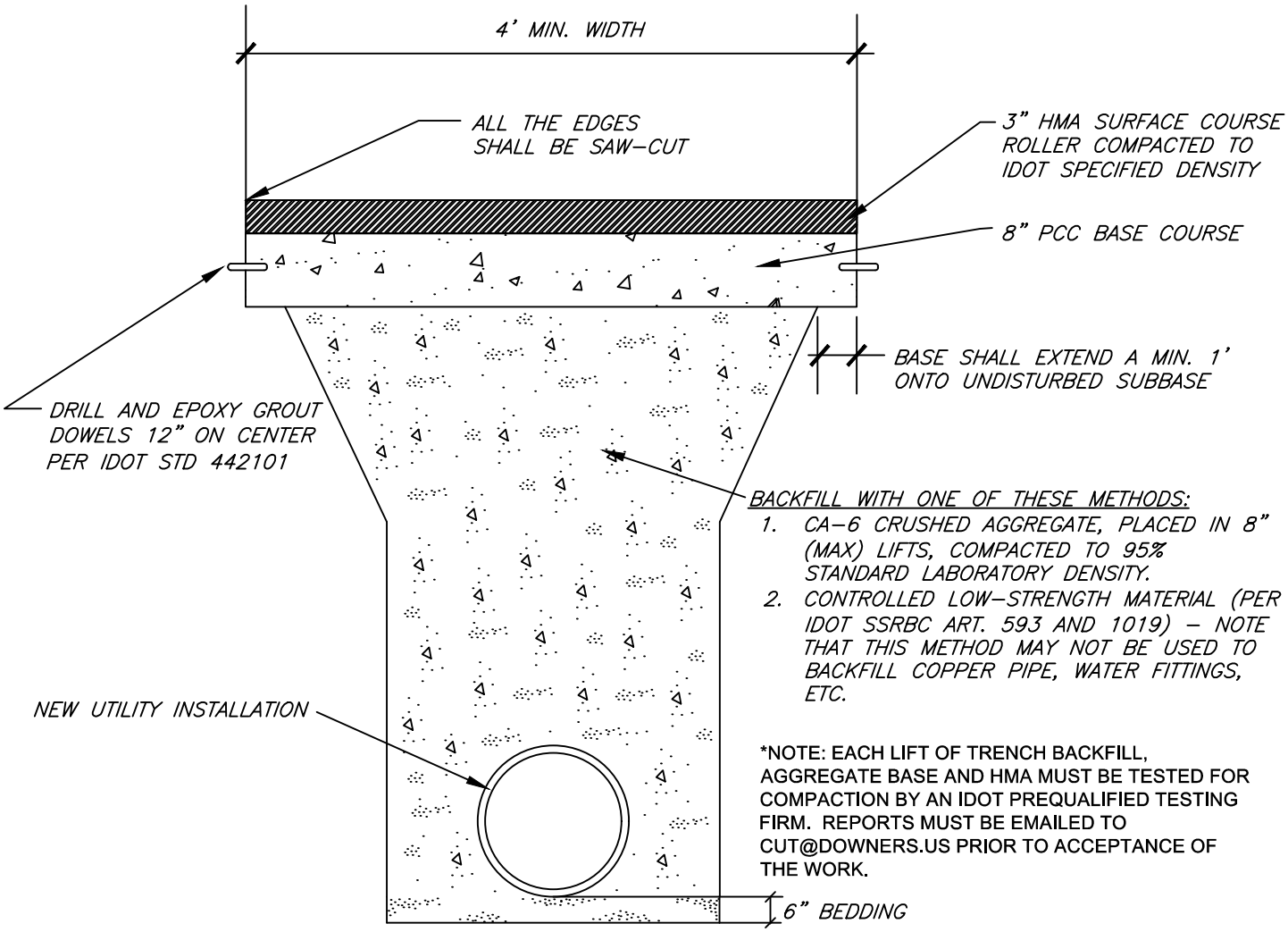

NOTES

* ALL CONSTRUCTION MATERIALS AND METHODS SHALL COMPLY WITH THE LATEST VERSION OF THE "STANDARD SPECIFICATIONS FOR WATER AND SEWER MAIN CONSTRUCTION IN THE STATE OF ILLINOIS" AND THE "STANDARD SPECIFICATIONS FOR ROAD & BRIDGE CONSTRUCTION", UNLESS OTHERWISE SPECIFIED HEREIN, OR BY THE DIRECTOR OF PUBLIC WORKS.

* ALL ROADWAYS SHALL REMAIN OPEN TO TRAFFIC WITH AT LEAST 1/2 THE WIDTH.

* IF MORE THAN 30% OF THE ROADWAY WIDTH IS AFFECTED, THE ENTIRE WIDTH OF THE ROADWAY MUST BE RESURFACED.

* ALL STREET OPENINGS MUST BE FULLY RESTORED WITHIN TEN DAYS.

* REFER TO CONDITIONS OF THE PERMIT AND CHAPTER 19 OF THE VILLAGE CODE FOR ADDITIONAL REQUIREMENTS.

N.T.S.	DATE	REVISIONS	DRAWN BY	APPVD BY	STANDARD DETAIL
Village of DOWNERS GROVE FOUNDED IN 1832	02/20/07		J.M.L.	M.D.M.	STREET OPENING BITUMINOUS WITH CONCRETE BASE
	03/25/11		S.A.V.	A.J.S.	
	03/01/15		A.J.S.	A.J.S.	
	01/01/17		N.R.H.	J.M.W.	
	01/01/18		N.R.H.	J.M.W.	
	DRAWING NO. PVT-16				
	I:\LIBRARY\DETAILS\PAVEMENT\PVT-16				

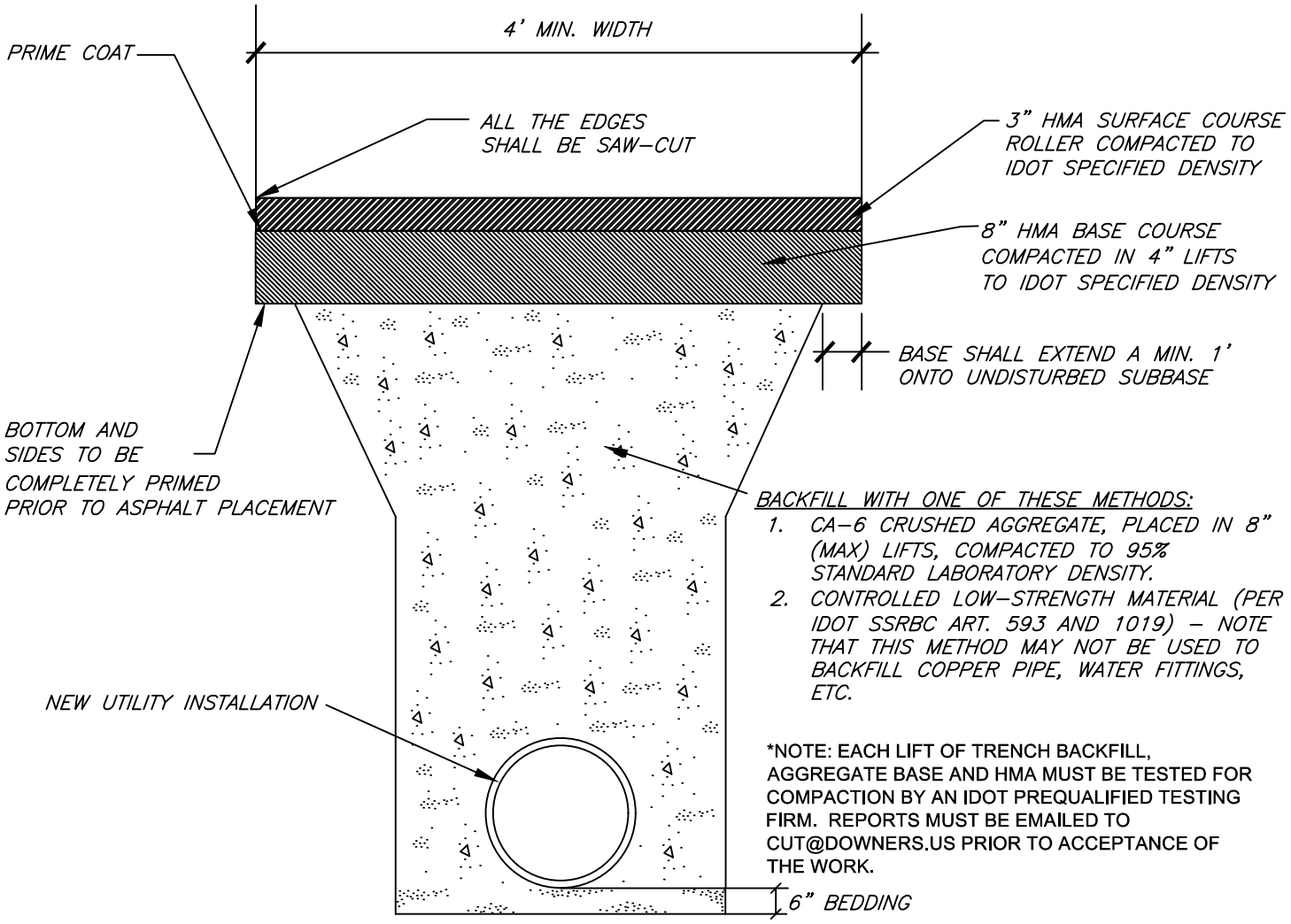

BACKFILL WITH ONE OF THESE METHODS:

1. CA-6 CRUSHED AGGREGATE, PLACED IN 8" (MAX) LIFTS, COMPACTED TO 95% STANDARD LABORATORY DENSITY.
2. CONTROLLED LOW-STRENGTH MATERIAL (PER IDOT SSRBC ART. 593 AND 1019) - NOTE THAT THIS METHOD MAY NOT BE USED TO BACKFILL COPPER PIPE, WATER FITTINGS, ETC.

*NOTE: EACH LIFT OF TRENCH BACKFILL, AGGREGATE BASE AND HMA MUST BE TESTED FOR COMPACTION BY AN IDOT PREQUALIFIED TESTING FIRM. REPORTS MUST BE EMAILED TO CUT@DOWNERS.US PRIOR TO ACCEPTANCE OF THE WORK.

NOTES

* ALL CONSTRUCTION MATERIALS AND METHODS SHALL COMPLY WITH THE LATEST VERSION OF THE "STANDARD SPECIFICATIONS FOR WATER AND SEWER MAIN CONSTRUCTION IN THE STATE OF ILLINOIS" AND THE "STANDARD SPECIFICATIONS FOR ROAD & BRIDGE CONSTRUCTION", UNLESS OTHERWISE SPECIFIED HEREIN, OR BY THE DIRECTOR OF PUBLIC WORKS.

* ALL ROADWAYS SHALL REMAIN OPEN TO TRAFFIC WITH AT LEAST 1/2 THE WIDTH.

* IF MORE THAN 30% OF THE ROADWAY WIDTH IS AFFECTED, THE ENTIRE WIDTH OF THE ROADWAY MUST BE RESURFACED.

* ALL STREET OPENINGS MUST BE FULLY RESTORED WITHIN TEN DAYS.

* REFER TO CONDITIONS OF THE PERMIT AND CHAPTER 19 OF THE VILLAGE CODE FOR ADDITIONAL REQUIREMENTS.

N.T.S.	DATE	REVISIONS	DRAWN BY	APPVD BY	STANDARD DETAIL
Village of DOWNERS GROVE FOUNDED IN 1832	03/25/11		S.A.V.	A.J.S.	STREET OPENING BITUMINOUS
	03/01/15		A.J.S.	A.J.S.	
	01/01/17		N.R.H.	J.M.W.	
	01/01/18		N.R.H.	J.M.W.	
	05/22/18		N.R.H.	J.M.W.	
	DRAWING NO. PVT-17				
	I:\LIBRARY\DETAILS\PAVEMENT\PVT-17				

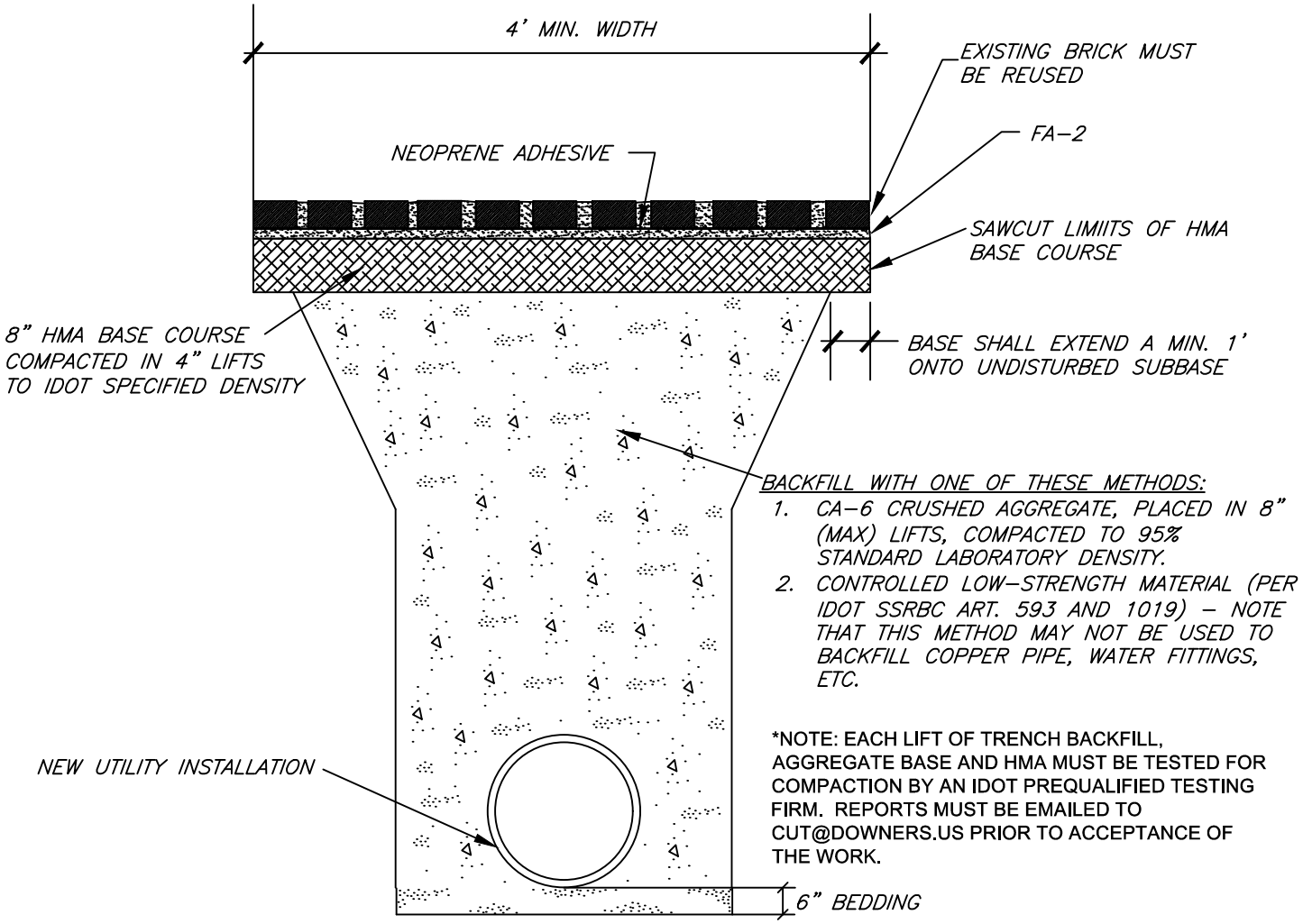

NOTES

* ALL CONSTRUCTION MATERIALS AND METHODS SHALL COMPLY WITH THE LATEST VERSION OF THE "STANDARD SPECIFICATIONS FOR WATER AND SEWER MAIN CONSTRUCTION IN THE STATE OF ILLINOIS" AND THE "STANDARD SPECIFICATIONS FOR ROAD & BRIDGE CONSTRUCTION", UNLESS OTHERWISE SPECIFIED HEREIN, OR BY THE DIRECTOR OF PUBLIC WORKS.

* ALL ROADWAYS SHALL REMAIN OPEN TO TRAFFIC WITH AT LEAST 1/2 THE WIDTH.

* IF MORE THAN 30% OF THE ROADWAY WIDTH IS AFFECTED, THE ENTIRE WIDTH OF THE ROADWAY MUST BE RESURFACED.

* ALL STREET OPENINGS MUST BE FULLY RESTORED WITHIN TEN DAYS.

* REFER TO CONDITIONS OF THE PERMIT AND CHAPTER 19 OF THE VILLAGE CODE FOR ADDITIONAL REQUIREMENTS.

N.T.S.	DATE	REVISIONS	DRAWN BY	APPVD BY	STANDARD DETAIL
Village of DOWNERS GROVE FOUNDED IN 1832	03/25/11		S.A.V.	A.J.S.	STREET OPENING BRICK WITH BIT. BASE
	03/01/15		A.J.S.	A.J.S.	
	01/01/17		N.R.H.	J.M.W.	
	01/01/18		N.R.H.	J.M.W.	
	05/22/18		N.R.H.	J.M.W.	
	DRAWING NO. PVT-18				
	I:\LIBRARY\DETAILS\PAVEMENT\PVT-18				

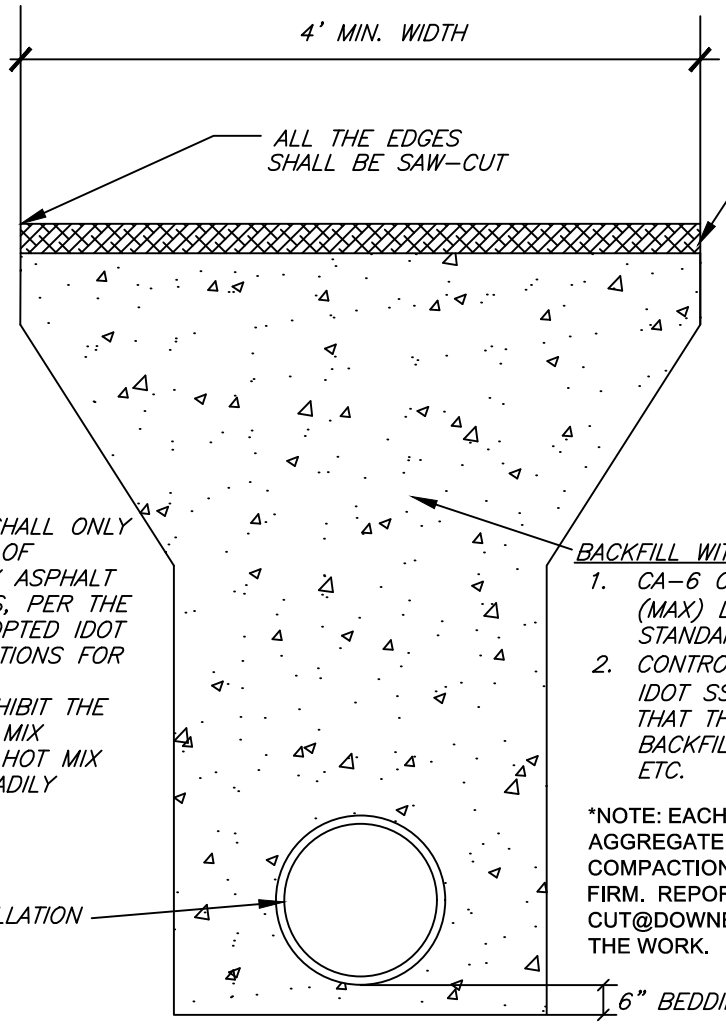

NOTICE:
TEMPORARY PATCH SHALL ONLY BE PLACED IN LIEU OF PERMANENT HOT MIX ASPHALT WHEN TEMPERATURES, PER THE MOST RECENTLY ADOPTED IDOT STANDARD SPECIFICATIONS FOR ROAD AND BRIDGE CONSTRUCTION, PROHIBIT THE PLACEMENT OF HOT MIX ASPHALT, OR WHEN HOT MIX ASPHALT IS NOT READILY AVAILABLE.

BACKFILL WITH ONE OF THESE METHODS:

1. CA-6 CRUSHED AGGREGATE, PLACED IN 8" (MAX) LIFTS, COMPACTED TO 95% STANDARD LABORATORY DENSITY.
2. CONTROLLED LOW-STRENGTH MATERIAL (PER IDOT SSRBC ART. 593 AND 1019) - NOTE THAT THIS METHOD MAY NOT BE USED TO BACKFILL COPPER PIPE, WATER FITTINGS, ETC.

*NOTE: EACH LIFT OF TRENCH BACKFILL, AGGREGATE BASE AND HMA MUST BE TESTED FOR COMPACTION BY AN IDOT PREQUALIFIED TESTING FIRM. REPORTS MUST BE EMAILED TO CUT@DOWNERS.US PRIOR TO ACCEPTANCE OF THE WORK.

NOTES

* TEMPORARY PATCH TO BE REMOVED AND REPLACED WITH FINAL PAVEMENT PATCH WHEN WEATHER PERMITS AS DIRECTED BY THE DEPARTMENT OF PUBLIC WORKS.

* ALL CONSTRUCTION MATERIALS AND METHODS SHALL COMPLY WITH THE LATEST VERSION OF THE "STANDARD SPECIFICATIONS FOR WATER AND SEWER MAIN CONSTRUCTION IN THE STATE OF ILLINOIS" AND THE "STANDARD SPECIFICATIONS FOR ROAD & BRIDGE CONSTRUCTION", UNLESS OTHERWISE SPECIFIED HEREIN, OR BY THE DIRECTOR OF PUBLIC WORKS.

* ALL ROADWAYS SHALL REMAIN OPEN TO TRAFFIC WITH AT LEAST 1/2 THE WIDTH.

* IF MORE THAN 30% OF THE ROADWAY WIDTH IS AFFECTED, THE ENTIRE WIDTH OF THE ROADWAY MUST BE RESURFACED.

* ALL STREET OPENINGS MUST BE FULLY RESTORED WITHIN TEN DAYS.

* REFER TO CONDITIONS OF THE PERMIT AND CHAPTER 19 OF THE VILLAGE CODE FOR ADDITIONAL REQUIREMENTS.

N.T.S.	DATE	REVISIONS	DRAWN BY	APPVD BY	STANDARD DETAIL
Village of DOWNERS GROVE FOUNDED IN 1832	02/20/07		J.M.L.	M.D.M.	STREET OPENING TEMPORARY
	03/25/11		S.A.V.	A.J.S.	
	03/01/15		A.J.S.	A.J.S.	
	01/01/17		N.R.H.	J.M.W.	
	01/01/18		N.R.H.	J.M.W.	
	DRAWING NO. PVT-19				
	I:\LIBRARY\DETAILS\PAVEMENT\PVT-19				

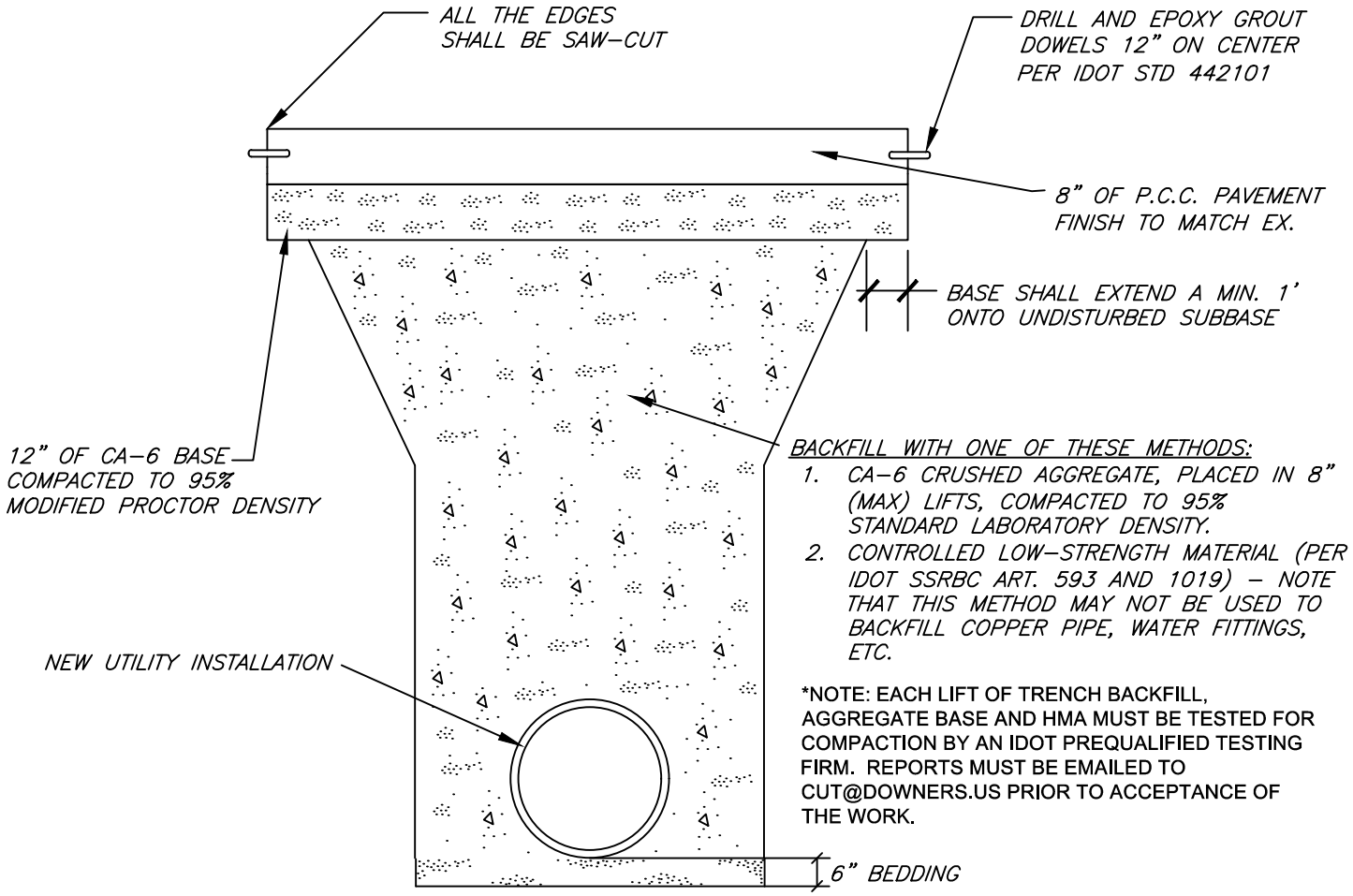

NOTES

* ALL CONSTRUCTION MATERIALS AND METHODS SHALL COMPLY WITH THE LATEST VERSION OF THE "STANDARD SPECIFICATIONS FOR WATER AND SEWER MAIN CONSTRUCTION IN THE STATE OF ILLINOIS" AND THE "STANDARD SPECIFICATIONS FOR ROAD & BRIDGE CONSTRUCTION", UNLESS OTHERWISE SPECIFIED HEREIN, OR BY THE DIRECTOR OF PUBLIC WORKS.

* ALL ROADWAYS SHALL REMAIN OPEN TO TRAFFIC WITH AT LEAST 1/2 THE WIDTH.

* IF MORE THAN 30% OF THE ROADWAY WIDTH IS AFFECTED, THE ENTIRE WIDTH OF THE ROADWAY MUST BE RESURFACED.

* ALL STREET OPENINGS MUST BE FULLY RESTORED WITHIN TEN DAYS.

* REFER TO CONDITIONS OF THE PERMIT AND CHAPTER 19 OF THE VILLAGE CODE FOR ADDITIONAL REQUIREMENTS.

N.T.S.	DATE	REVISIONS	DRAWN BY	APPVD BY	STANDARD DETAIL
Village of DOWNERS GROVE FOUNDED IN 1832	02/20/07		J.M.L.	M.D.M.	STREET OPENING CONCRETE STREETS
	03/25/11		S.A.V.	A.J.S.	
	03/01/15		A.J.S.	A.J.S.	
	01/01/17		N.R.H.	J.M.W.	
	01/01/18		N.R.H.	J.M.W.	
	DRAWING NO. PVT-20				
	I:\LIBRARY\DETAILS\PAVEMENT\PVT-20				

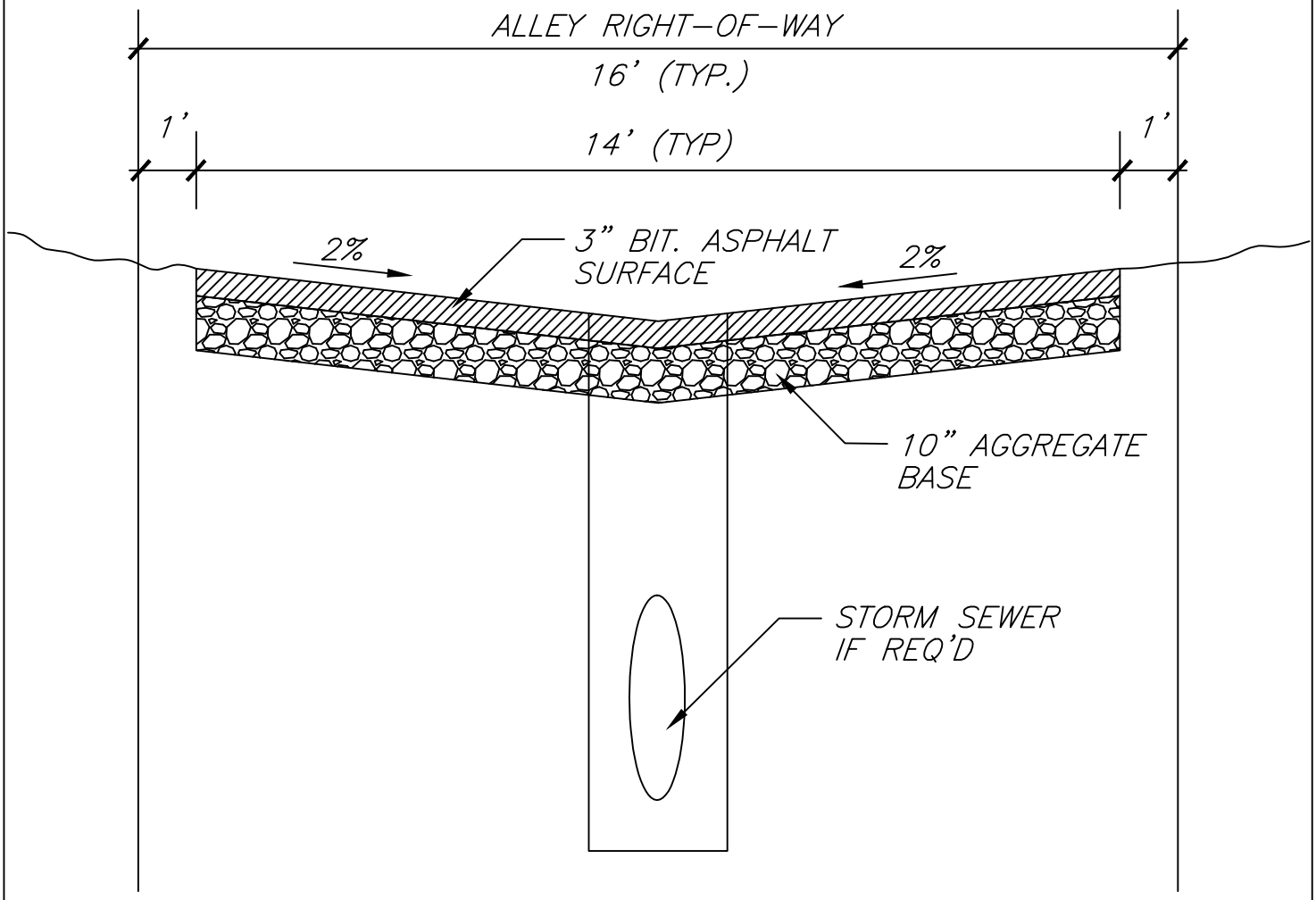

NOTE

* GRADING AND DRAINAGE TO BE DETERMINED BY LICENSED P.E.

N.T.S.	DATE	REVISIONS	DRAWN BY	APPVD BY	STANDARD DETAIL
Village of DOWNERS GROVE FOUNDED IN 1832	04/21/14		R.W.B.	A.J.S.	IMPROVED RESIDENTIAL ALLEY DETAIL
	03/01/15		R.W.B.	A.J.S.	
	01/01/17		N.R.H.	J.M.W.	
	01/01/18		N.R.H.	J.M.W.	
	DRAWING NO. PVT-30				
	I:\LIBRARY\DETAILS\PAVEMENT\PVT-30				

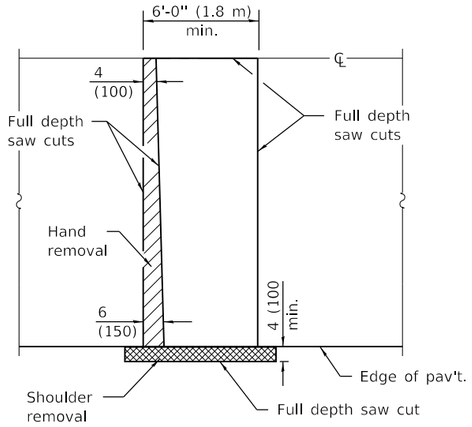

PAVEMENT SAWING DETAIL

(HMA SHOULDER)

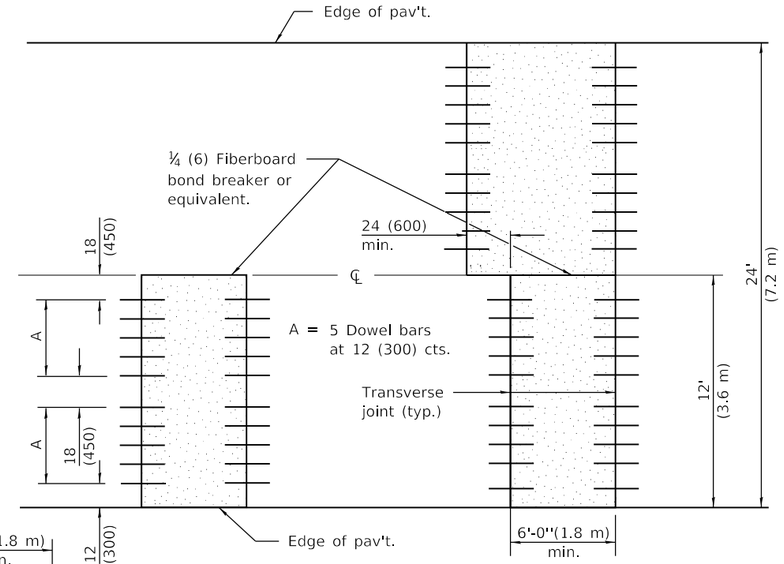

12' (3.6 m) WIDE LANES

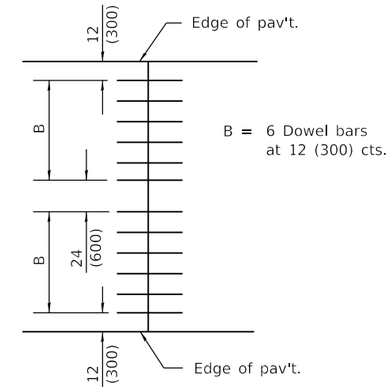

14' (4.2 m) WIDE RAMP

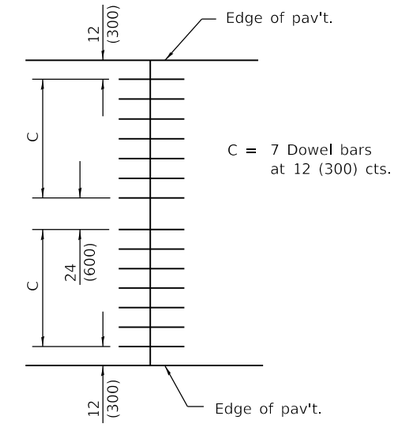

16' (4.8 m) WIDE RAMP

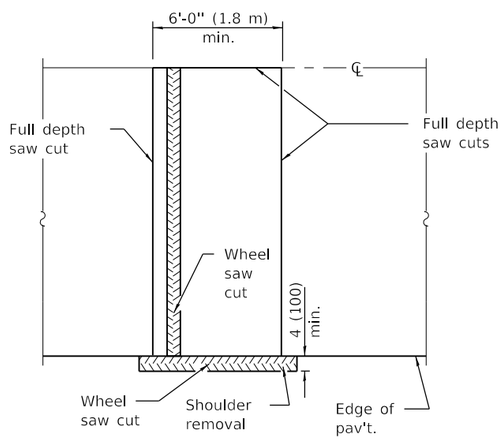

ALTERNATE SAWING DETAIL

(HMA SHOULDER)

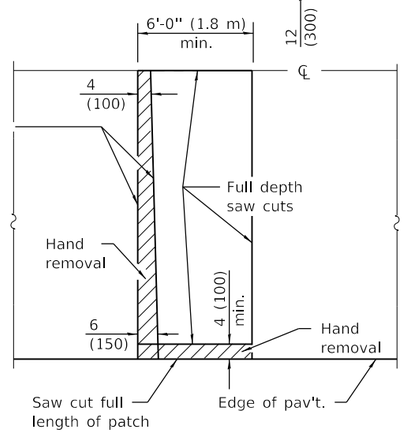

PAVEMENT SAWING DETAIL

(PCC SHOULDER)

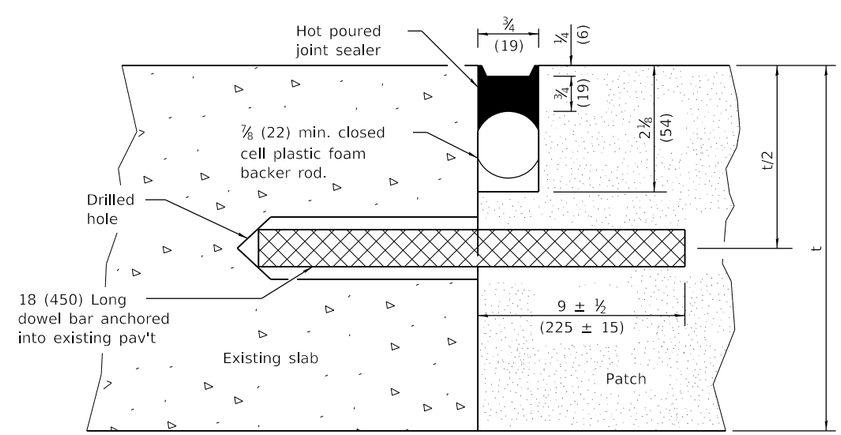

TRANSVERSE JOINT

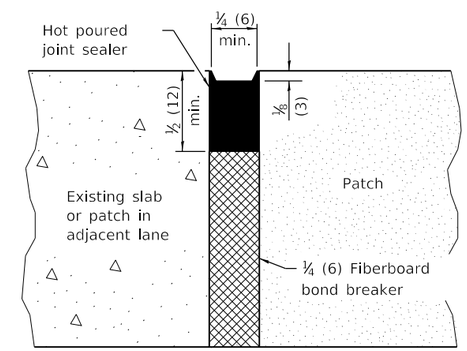

CENTERLINE JOINT

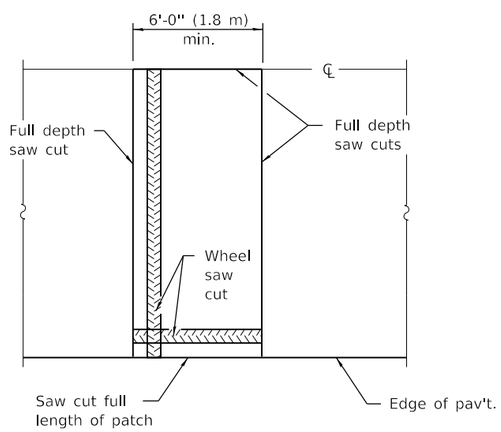

ALTERNATE SAWING DETAIL

(PCC SHOULDER)

DOWEL BAR TABLE		
PAVEMENT THICKNESS	DOWEL BAR DIAMETER	HOLE DIAMETER
10 (250) or greater	1½ (38)	1⅝ (41)
8 (200) thru 9.99 (249)	1¼ (32)	1⅜ (35)
Less than 8 (200)	1 (25)	1⅛ (29)

GENERAL NOTES

The transverse joints for Class B patches shall align with joints or cracks in the adjacent lane whenever possible.

See Standard 420701 for details of welded wire reinforcement.

All dimensions are in inches (millimeters) unless otherwise shown.

Illinois Department of Transportation

PASSED January 1, 2019
ENGINEER OF POLICY AND PROCEDURES

APPROVED January 1, 2019
ENGINEER OF DESIGN AND ENVIRONMENT

ISSUED 1-1-97

DATE	REVISIONS
1-1-19	Revised reference to Standard
	420701 in General Notes.
1-1-18	Revised DOWEL BAR TABLE.

CLASS B PATCHES

(Sheet 1 of 2)

STANDARD 442101-09

TRANSVERSE EXPANSION JOINTS

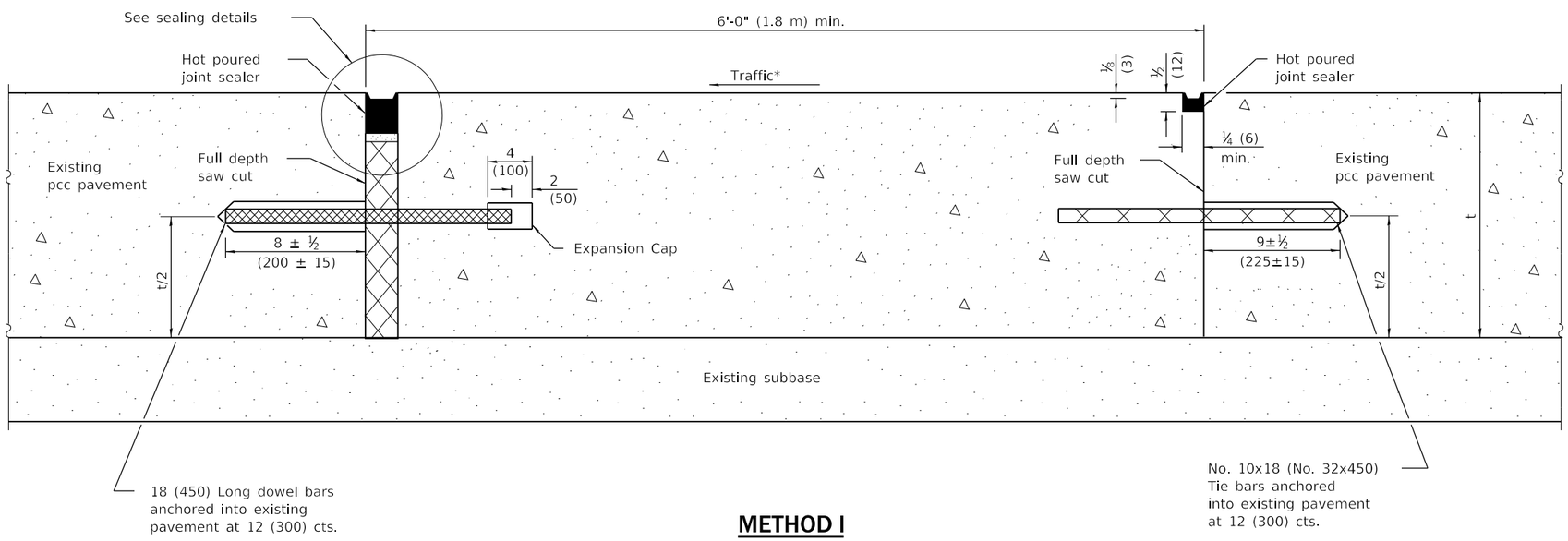

METHOD I

(Without Resurfacing)

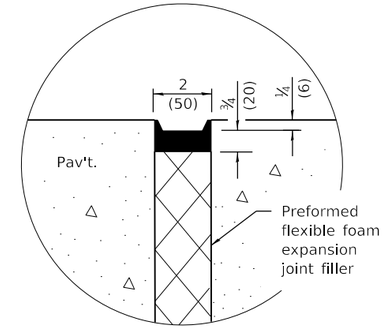

SEALING DETAIL

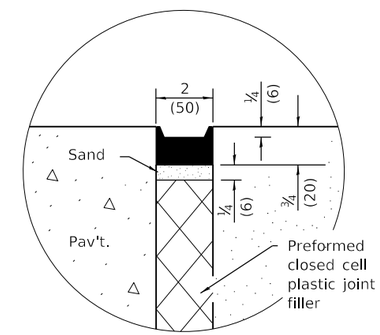

SEALING DETAIL

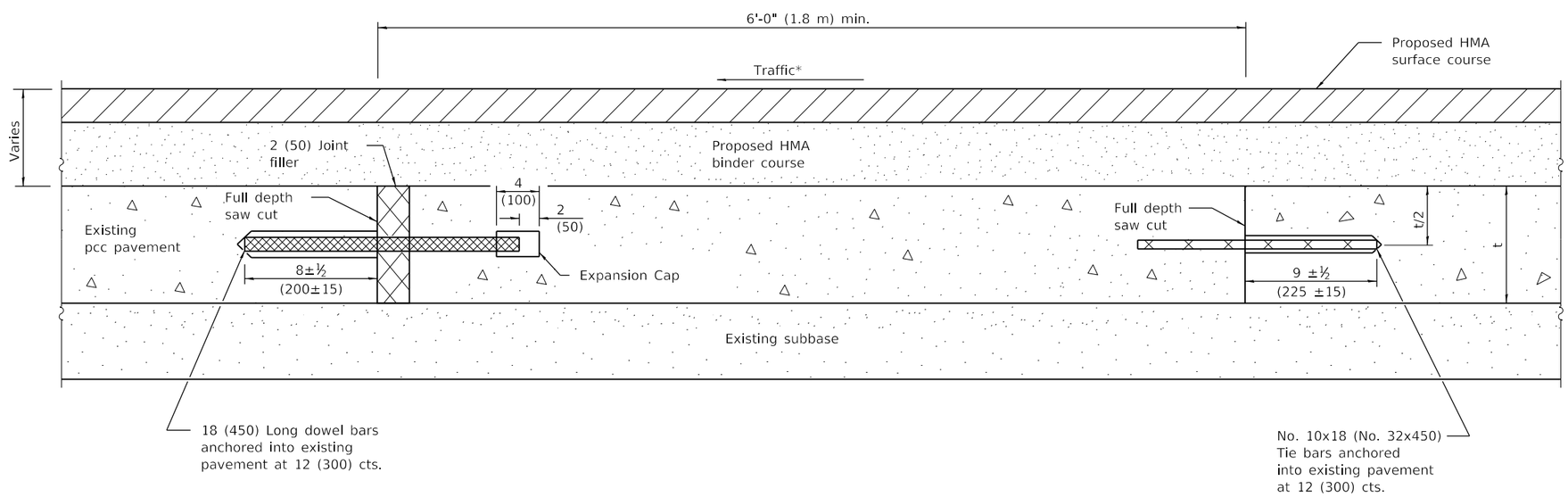

METHOD II

(With Resurfacing)

NOTE

* When re-establishing a transverse expansion joint on a two-lane, two-way road, reverse the orientation of the dowel bars with respect to traffic for one of the patches such that the joint will be continuous across both lanes.

Illinois Department of Transportation

PASSED January 1, 2019
ENGINEER OF POLICY AND PROCEDURES

APPROVED January 1, 2019
ENGINEER OF DESIGN AND ENVIRONMENT

ISSUED 1-1-97

CLASS B PATCHES

(Sheet 2 of 2)

STANDARD 442101-09

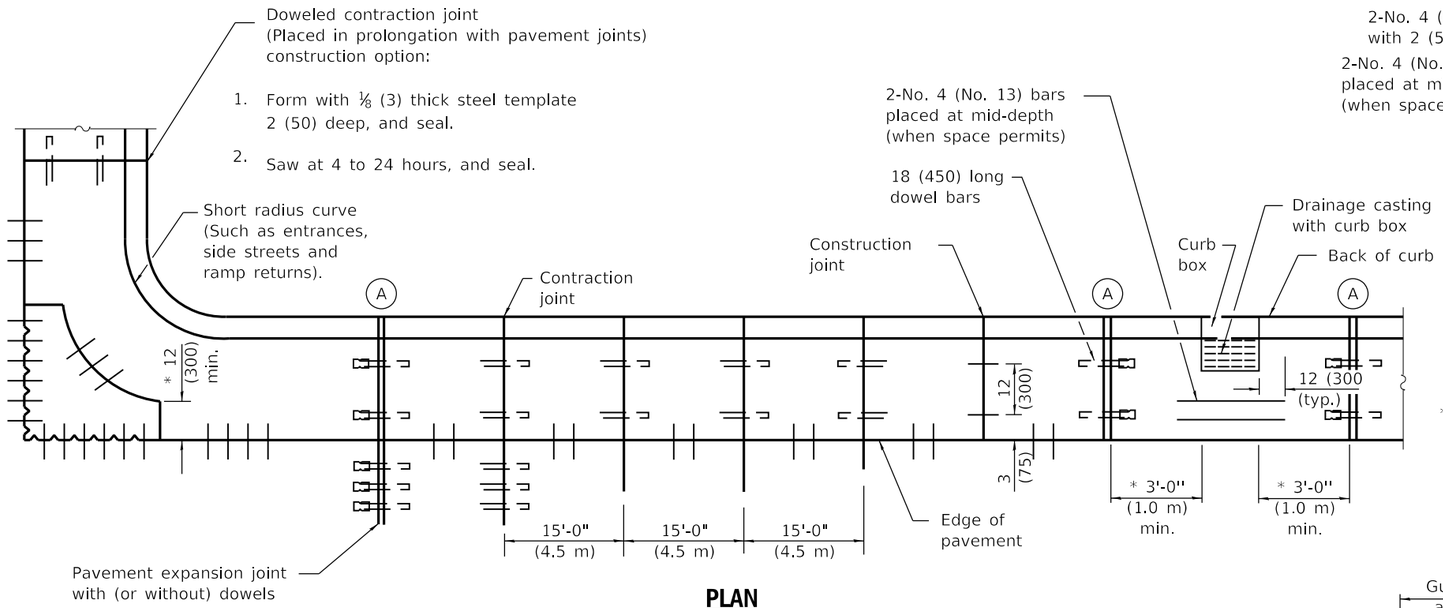

PLAN
ADJACENT TO PCC PAVEMENT OR PCC BASE COURSE

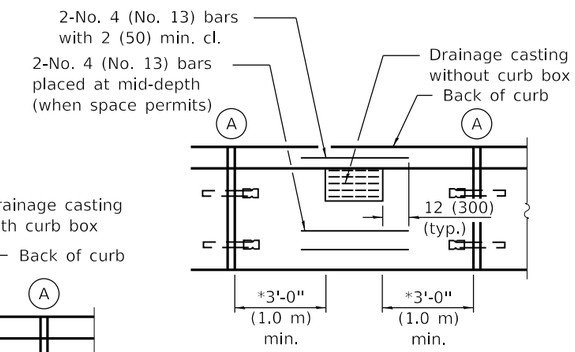

* This dimension shall be adjusted to align with joint on the adjacent pavement

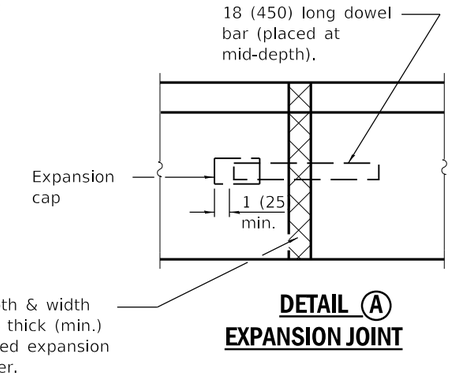

DETAIL Ⓐ
EXPANSION JOINT

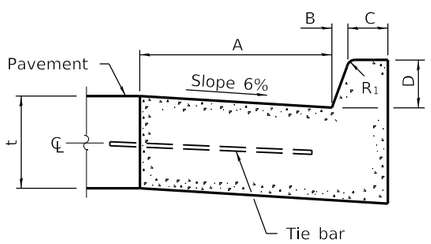

BARRIER CURB

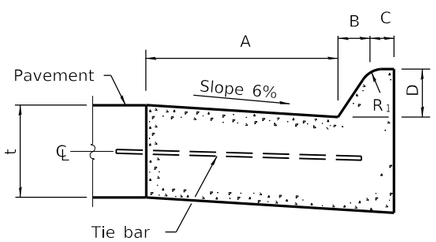

MOUNTABLE CURB

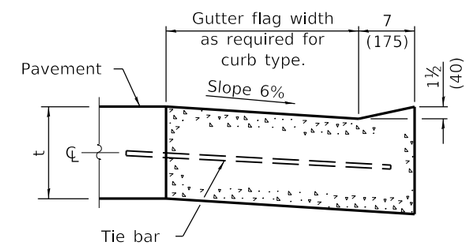

DEPRESSED CURB (TYPICAL)

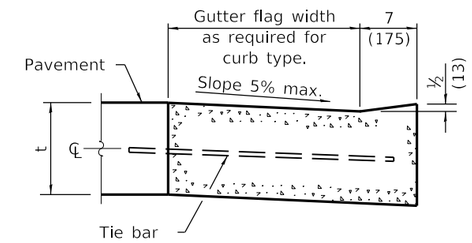

DEPRESSED CURB ADJACENT TO CURB RAMP ACCESSIBLE TO THE DISABLED

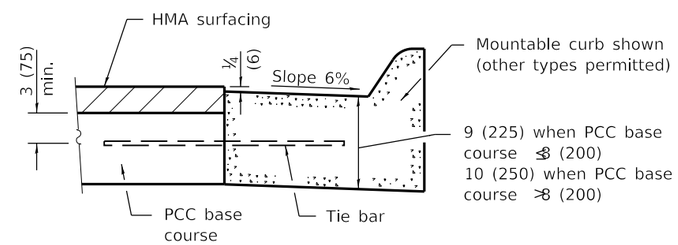

ADJACENT TO PCC BASE COURSE WITH HMA SURFACING

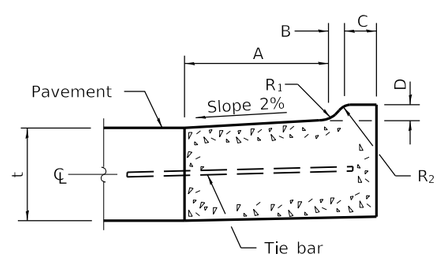

M-2.06 (M-5.15) and M-2.12 (M-5.30)

GENERAL NOTES

The bottom slope of combination curb and gutter constructed adjacent to pcc pavement shall be the same slope as the subbase or 6% when subbase is omitted.

t = Thickness of pavement.

Longitudinal joint tie bars shall be No. 6 (No. 19) at 36 (900) centers in accordance with details for longitudinal construction joint shown on Standard 420001.

A minimum clearance of 2 (50) between the end of the tie bar and the back of the curb shall be maintained.

The dowel bars shown in contraction joints will only be required for monolithic construction.

See Standard 606301 for details of corner islands.

All dimensions are in inches (millimeters) unless otherwise shown.

TABLE OF DIMENSIONS
BARRIER CURB

TYPE	A	B	C	D	R_1
B-6.06 * (B-15.15)	6 (150)	1 (25)	6 (150)	6 (150)	1 (25)
B-6.12 (B-15.3)	12 (300)	1 (25)	6 (150)	6 (150)	1 (25)
B-6.18 (B-15.45)	18 (450)	1 (25)	6 (150)	6 (150)	1 (25)
B-6.24 (B-15.60)	24 (600)	1 (25)	6 (150)	6 (150)	1 (25)
B-9.12 (B-22.30)	12 (300)	2 (50)	5 (125)	9 (225)	1 (25)
B-9.18 (B-22.45)	18 (450)	2 (50)	5 (125)	9 (225)	1 (25)
B-9.24 (B-22.60)	24 (600)	2 (50)	5 (125)	9 (225)	1 (25)

* For corner islands only.

TABLE OF DIMENSIONS
MOUNTABLE CURB

TYPE	A	B	C	D	R_1	R_2
M-2.06 (M-5.15)	6 (150)	2 (50)	4 (100)	2 (50)	3 (75)	2 (50)
M-2.12 (M-5.30)	12 (300)	2 (50)	4 (100)	2 (50)	3 (75)	2 (50)
M-4.06 (M-10.15)	6 (150)	4 (100)	3 (75)	4 (100)	3 (75)	NA
M-4.12 (M-10.30)	12 (300)	4 (100)	3 (75)	4 (100)	3 (75)	NA
M-4.18 (M-10.45)	18 (450)	4 (100)	3 (75)	4 (100)	3 (75)	NA
M-4.24 (M-10.60)	24 (600)	4 (100)	3 (75)	4 (100)	3 (75)	NA
M-6.06 (M-15.15)	6 (150)	6 (150)	2 (50)	6 (150)	2 (50)	NA
M-6.12 (M-15.30)	12 (300)	6 (150)	2 (50)	6 (150)	2 (50)	NA
M-6.18 (M-15.45)	18 (450)	6 (150)	2 (50)	6 (150)	2 (50)	NA
M-6.24 (M-15.60)	24 (600)	6 (150)	2 (50)	6 (150)	2 (50)	NA

Illinois Department of Transportation

PASSED January 1, 2018
Michael Brand
ENGINEER OF POLICY AND PROCEDURES

APPROVED January 1, 2018
Maureen M. Addis
ENGINEER OF DESIGN AND ENVIRONMENT

ISSUED 1-1-97

DATE	REVISIONS
1-1-18	Revised General Note for tie
	bar spacing to 36 (900) cts.
1-1-15	Added B-6.06 (B-15.15) barrier
	curb and gutter to table
	(corner islands only).

CONCRETE CURB TYPE B AND COMBINATION CONCRETE CURB AND GUTTER

(Sheet 1 of 2)

STANDARD 606001-07

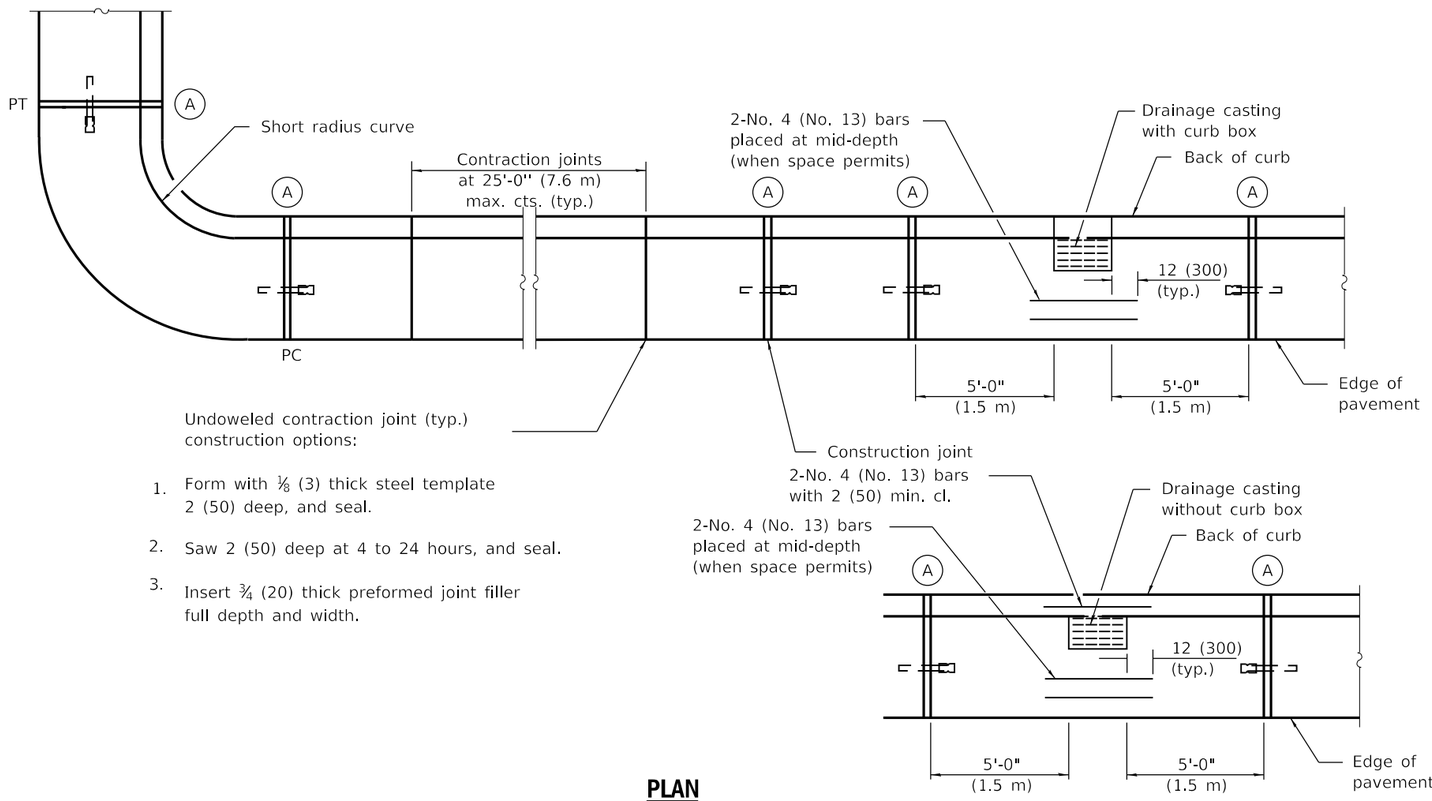

PLAN

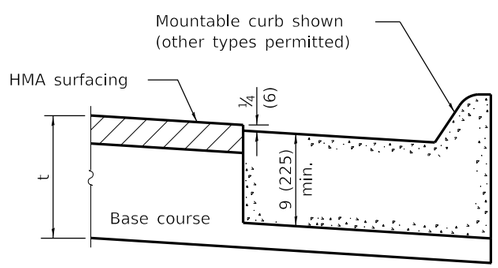

ON DISTURBED SUBGRADE

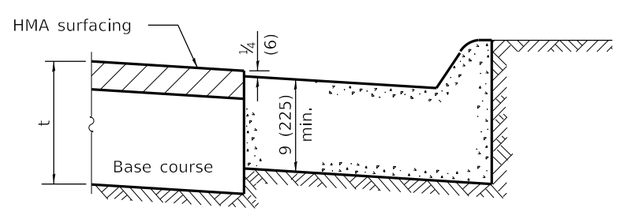

ON UNDISTURBED SUBGRADE

ADJACENT TO FLEXIBLE PAVEMENT

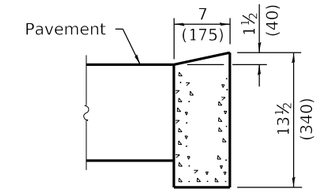

DEPRESSED CURB

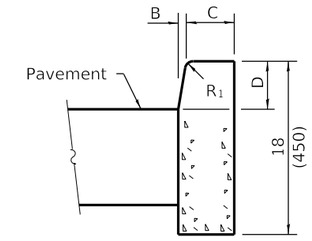

BARRIER CURB

ADJACENT TO FLEXIBLE PAVEMENT

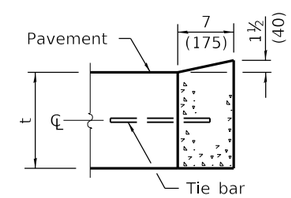

DEPRESSED CURB

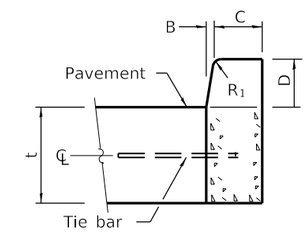

BARRIER CURB

ADJACENT TO PCC PAVEMENT OR PCC BASE COURSE

CONCRETE CURB TYPE B

Illinois Department of Transportation

PASSED January 1, 2018
Michael Brand
ENGINEER OF POLICY AND PROCEDURES

APPROVED January 1, 2018
Maureen M. Addis
ENGINEER OF DESIGN AND ENVIRONMENT

ISSUED 1-1-97

CONCRETE CURB TYPE B AND COMBINATION CONCRETE CURB AND GUTTER

(Sheet 2 of 2)

STANDARD 606001-07

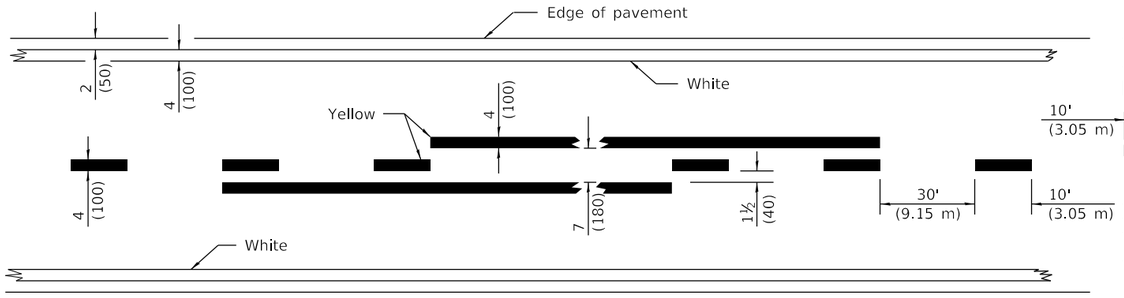

2 LANE

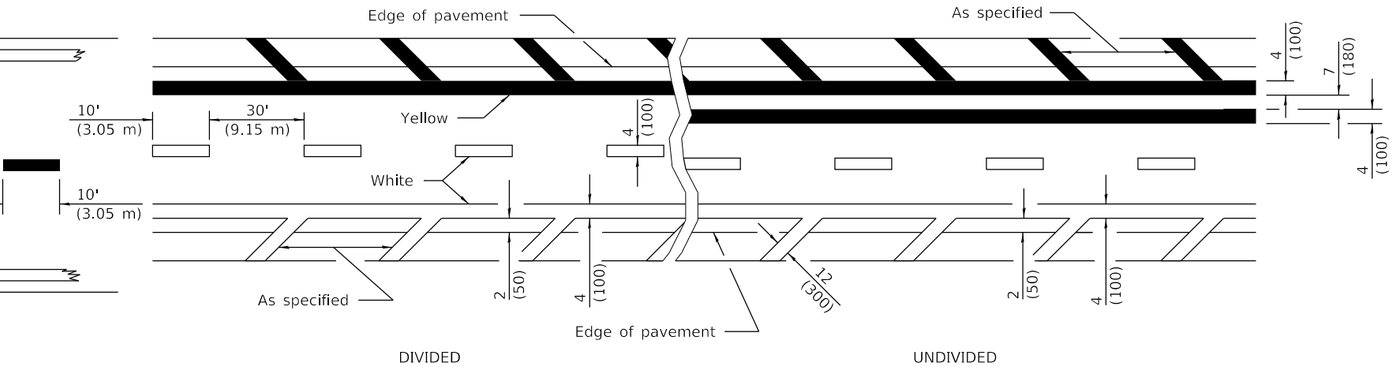

MULTI LANE

LANE AND EDGE LINES

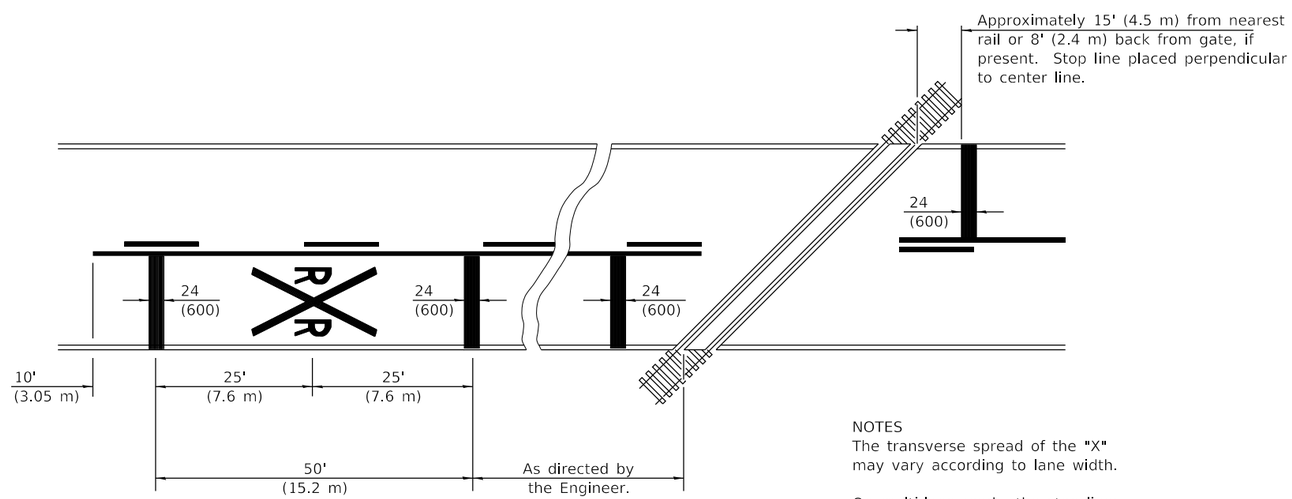

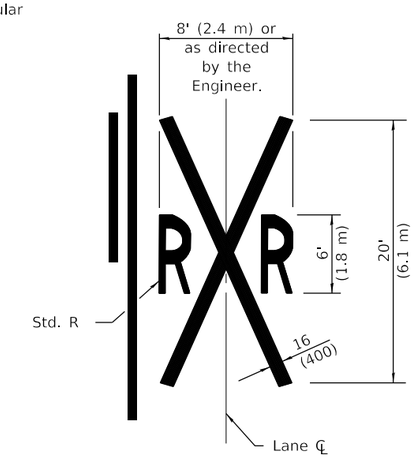

NOTES
The transverse spread of the "X" may vary according to lane width.

On multi-lane roads, the stop lines shall extend across all approach lanes and separate RXR symbols shall be placed adjacent to each other in each lane.

When the pavement marking symbol is used, a portion of the symbol should be located directly adjacent to the Advance Warning Sign (W10-1) as placed by Table 2C-4, Condition B of the MUTCD.

PAVEMENT MARKINGS AT RAILROAD-HIGHWAY GRADE CROSSING

All dimensions are in inches (millimeters) unless otherwise shown.

Illinois Department of Transportation

PASSED January 1, 2015
ENGINEER OF OPERATIONS
APPROVED January 1, 2015
ENGINEER OF DESIGN AND ENVIRONMENT

ISSUED 1-1-97

DATE	REVISIONS
1-1-15	Added symbols. Revised
	bike symbol. Revised note
	for stop line at RR crossing.
1-1-14	Added bike symbol. Renamed
	'LANE DROP ARROW' detail to
	'LANE-REDUCTION ARROW'.

TYPICAL PAVEMENT MARKINGS

(Sheet 1 of 3)

STANDARD 780001-05

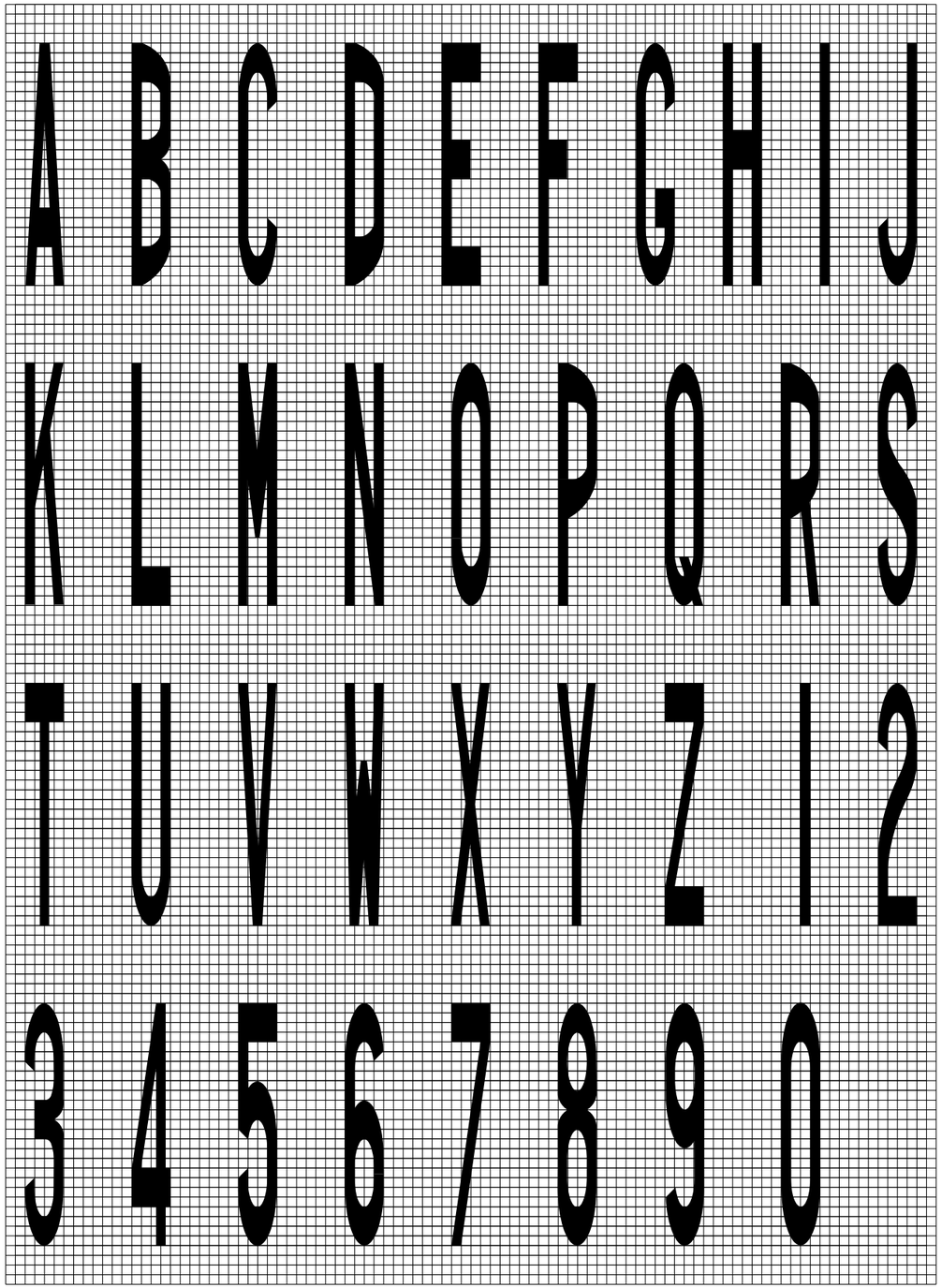

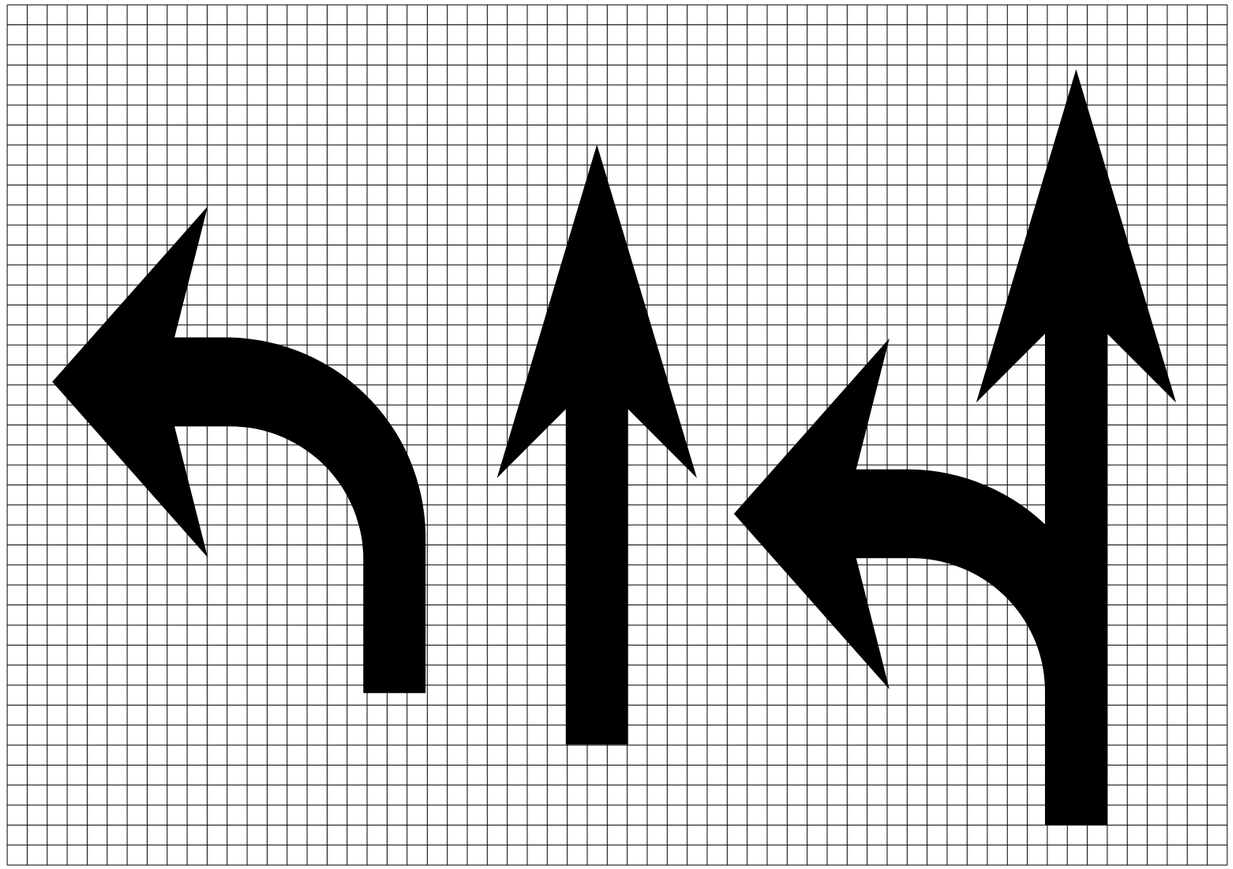

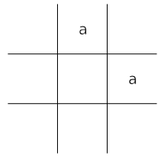

Legend Height	Arrow Size	a
6' (1.8 m)	Small	2.9 (74)
8' (2.4 m)	Large	3.8 (96)

The space between adjacent letters or numerals should be approximately 3 (75) for 6' (1.8 m) legend and 4 (100) for 8' (2.4 m) legend.

LETTER AND ARROW GRID SCALE

Illinois Department of Transportation

PASSED January 1, 2015

ENGINEER OF OPERATIONS

APPROVED January 1, 2015

ENGINEER OF DESIGN AND ENVIRONMENT

ISSUED 1-1-97

TYPICAL PAVEMENT MARKINGS

(Sheet 2 of 3)

STANDARD 780001-05

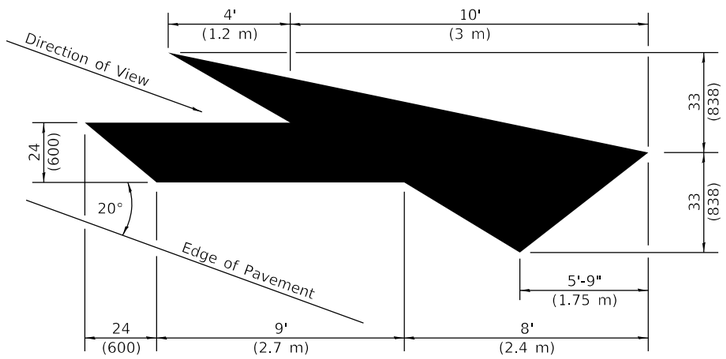

LANE-REDUCTION ARROW

Right lane-reduction arrow shown.
Use mirror image for left lane.

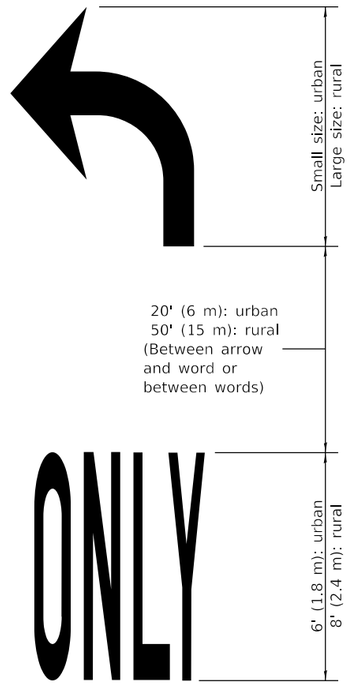

WORD AND ARROW LAYOUT

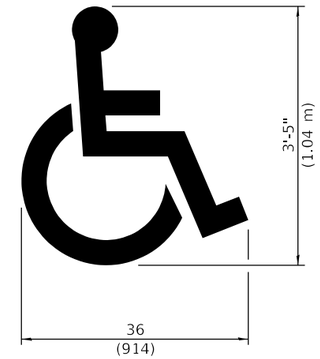

INTERNATIONAL SYMBOL OF ACCESSILITY

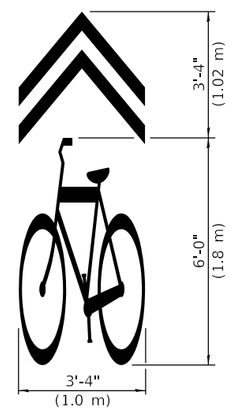

SHARED LANE SYMBOL

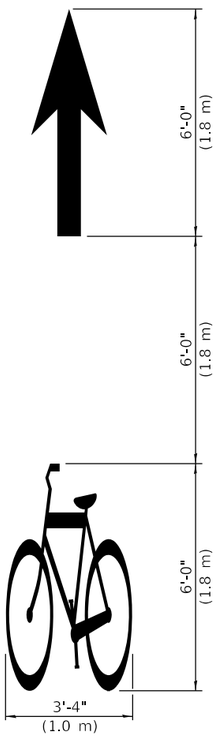

BIKE SYMBOL

(Arrow is optional.)

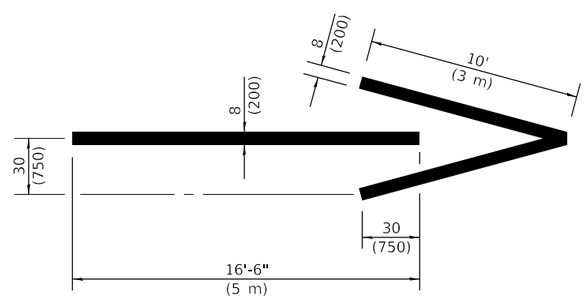

WRONG WAY ARROW

Illinois Department of Transportation

PASSED January 1, 2015

ENGINEER OF OPERATIONS

APPROVED January 1, 2015

ENGINEER OF DESIGN AND ENVIRONMENT

ISSUED 1-1-97

TYPICAL PAVEMENT MARKINGS

(Sheet 3 of 3)

STANDARD 780001-05

ALL CONSTRUCTION MATERIALS AND METHODS SHALL COMPLY WITH THE " STANDARD SPECIFICATION FOR ROAD & BRIDGE CONSTRUCTION" AS ADOPTED BY THE ILLINOIS DEPT. OF TRANSPORTATION UNLESS OTHERWISE SPECIFIED HEREIN

ABSOLUTELY NO CHLORIDE ACCELERANT OR WIRE MESH WILL BE PERMITTED

TYPICAL SIDEWALK PLACEMENT IN R.O.W.

PLACE 1/2" PRE-MOLDED EXPANSION JOINT WHERE ABUTTING EXISTING. CONC. BOTH SIDES OF UTILITY STRUCTURE @ EVERY 50' O.C.

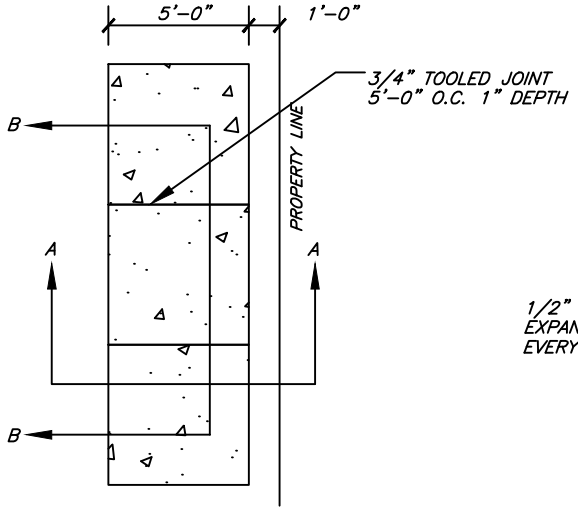

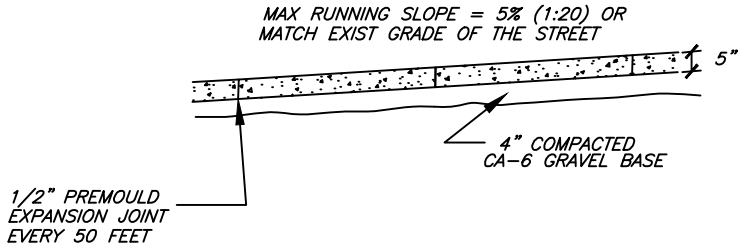

SECTION B-B

SAW CUT EXISTING CURB PERPENDICULAR TO BACK 6" FROM EDGE OF WALK UNLESS CUT FALLS WITHIN 5' OF EXIST. JOINT, REMOVE TO EXIST. JOINT. FOR FURTHER DETAILS SEE CURB & GUTTER SPECIFICATIONS

BARRICADING
PLACE TYPE II BARRICADES WITH FLASHING LIGHTS ON ALL SIDES OF EXCAVATIONS. MAINTAIN BARRICADES FOR MIN. 72 HRS AFTER PLACEMENT

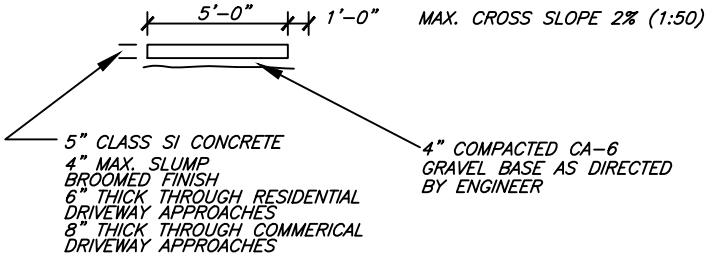

SECTION A-A

N.T.S.	DATE	REVISIONS	DRAWN BY	APPVD BY	STANDARD DETAIL
Village of DOWNERS GROVE FOUNDED IN 1832	10/10/11		S.A.V.	A.J.S.	PUBLIC SIDEWALK
	05/01/12		T.J.T.	A.J.S.	
	03/01/15		A.J.S.	A.J.S.	
	01/01/17		N.R.H.	J.M.W.	
	01/01/18		N.R.H.	J.M.W.	
	DRAWING NO. SWK-01				
	I:\LIBRARY\DETAILS\SIDEWALK\SWK-01				

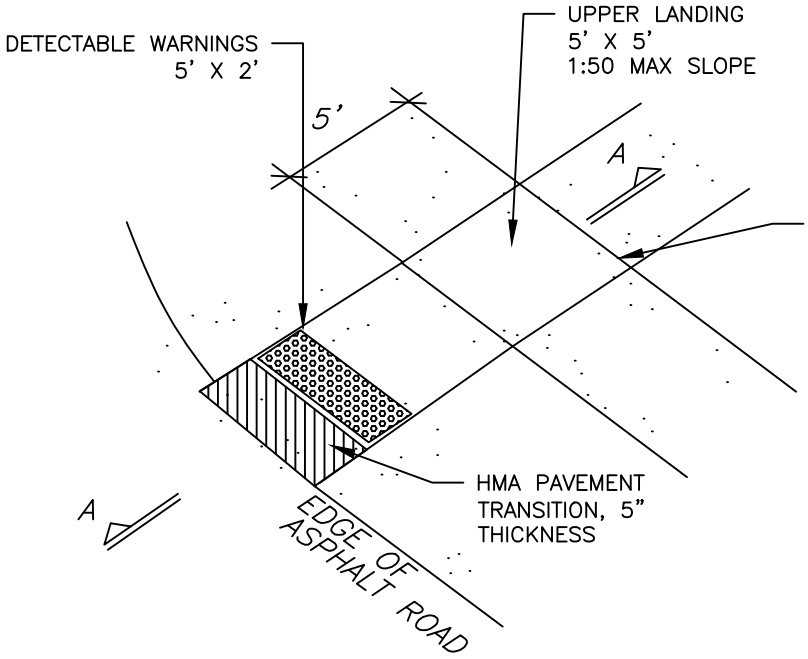

ISOMETRIC VIEW

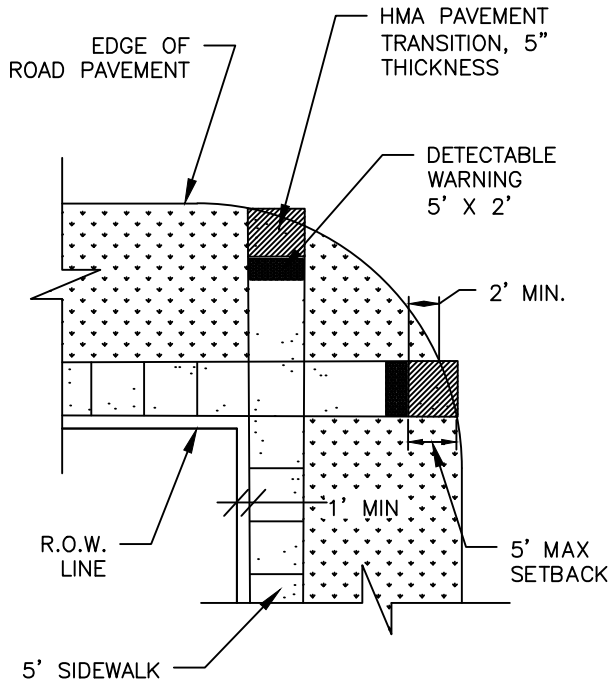

PLAN

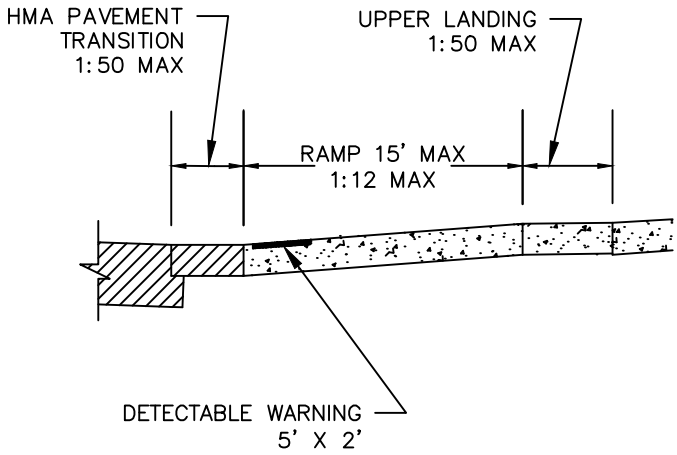

SECTION A–A

RAMPS SHALL MEET REQUIREMENTS OF IDOT STD. DETAILS FOR CURB RAMPS.

INSERT ADA DETECTABLE WARNING SURFACE TILE AS SPECIFIED. DYED CONCRETE NOT ALLOWED.

THE TYPE OF DETECTABLE WARNING TILE SHALL BE ARMOR–TILE, ACCESS TILE, OR TUFTILE TACTILE WARNING SYSTEMS.

N.T.S.	DATE	REVISIONS	DRAWN BY	APPVD BY	STANDARD DETAIL
Village of DOWNERS GROVE FOUNDED IN 1832	03/25/11		S.A.V.	A.J.S.	A.D.A RAMPS ON NON–CURBED STREETS
	03/26/12		T.J.T.	A.J.S.	
	03/01/15		A.J.S.	A.J.S.	
	01/01/17		N.R.H.	J.M.W.	
	01/01/18		N.R.H.	J.M.W.	
	DRAWING NO.SWK–03				
	I:\LIBRARY\DETAILS\SIDEWALK\SWK–03				

DOWNTOWN BUSINESS DISTRICT SIDEWALK CONSTRUCTION REQUIREMENTS

1. CONSTRUCTION SHALL BE IN ACCORDANCE WITH THE MOST CURRENT CONSTRUCTION DETAILS FOR THE VILLAGE OF DOWNERS GROVE FOR SIDEWALK (SWK-01 AND SWK-03) AND ILLINOIS DEPARTMENT OF TRANSPORTATION CONSTRUCTION DETAILS FOR CURB RAMPS.

2. ENTIRE CONCRETE SIDEWALK SQUARES AFFECTED BY IMPROVEMENTS SHALL BE REMOVED AND REPLACED AT THE NEAREST JOINT TO MATCH EXISTING SURROUNDING SIDEWALK. PARTIAL SQUARE REPLACEMENT WILL NOT BE ALLOWED. LIMITS OF SIDEWALK IMPROVEMENTS SHALL BE NOTED ON THE PLANS.

3. CONCRETE SIDEWALK SHALL BE COLORED WITH CONCRETE COLORANT, "HARVEST WHEAT" (PRODUCT #U16), SUPPLIED BY BUTTERFIELD COLOR (1-800-282-3388), OR APPROVED EQUAL. CONCRETE COLORANT SHALL BE APPROVED BY THE ENGINEER BEFORE USE.

4. ALL PIPES, CONDUITS, OR OTHER MATERIALS SHALL BE DISTRIBUTED ALONG RIGHT-OF-WAY IN A MANNER TO MINIMIZE HAZARDS TO PUBLIC, MINIMIZE OBSTACLES, AND TO NOT CAUSE DAMAGE TO EXISTING RIGHT-OF-WAY TREES OR OTHER ITEMS.

5. A TRAFFIC CONTROL AND PEDESTRIAN PROTECTION PLAN THAT MEETS ALL APPLICABLE FEDERAL, STATE, AND LOCAL REQUIREMENTS SHALL BE SUBMITTED AND APPROVED BY THE VILLAGE OF DOWNERS GROVE PRIOR TO THE START OF CONSTRUCTION.

6. TYPE II BARRICADES WITH FLASHING LIGHTS SHALL BE PLACED ON ALL SIDES OF EXCAVATIONS AND MUST BE MAINTAINED FOR A MINIMUM OF 72 HOURS AFTER PLACEMENT OF NEW CONCRETE.

7. ALL WORK SHALL BE PHASED TO MINIMIZE INTERFERENCE WITH PEDESTRIAN AND VEHICLE TRAFFIC.

N.T.S.	DATE	REVISIONS	DRAWN BY	APPVD BY	STANDARD DETAIL
Village of DOWNERS GROVE FOUNDED IN 1832	01/01/17		N.R.H.	J.M.W.	DOWNTOWN BUSINESS DISTRICT PUBLIC SIDEWALK REQUIREMENTS
	01/01/18		N.R.H.	J.M.W.	
	05/07/18		N.R.H.	J.M.W.	
	DRAWING NO. SWK-08				
	I:\LIBRARY\DETAILS\SIDEWALK\SWK-08				

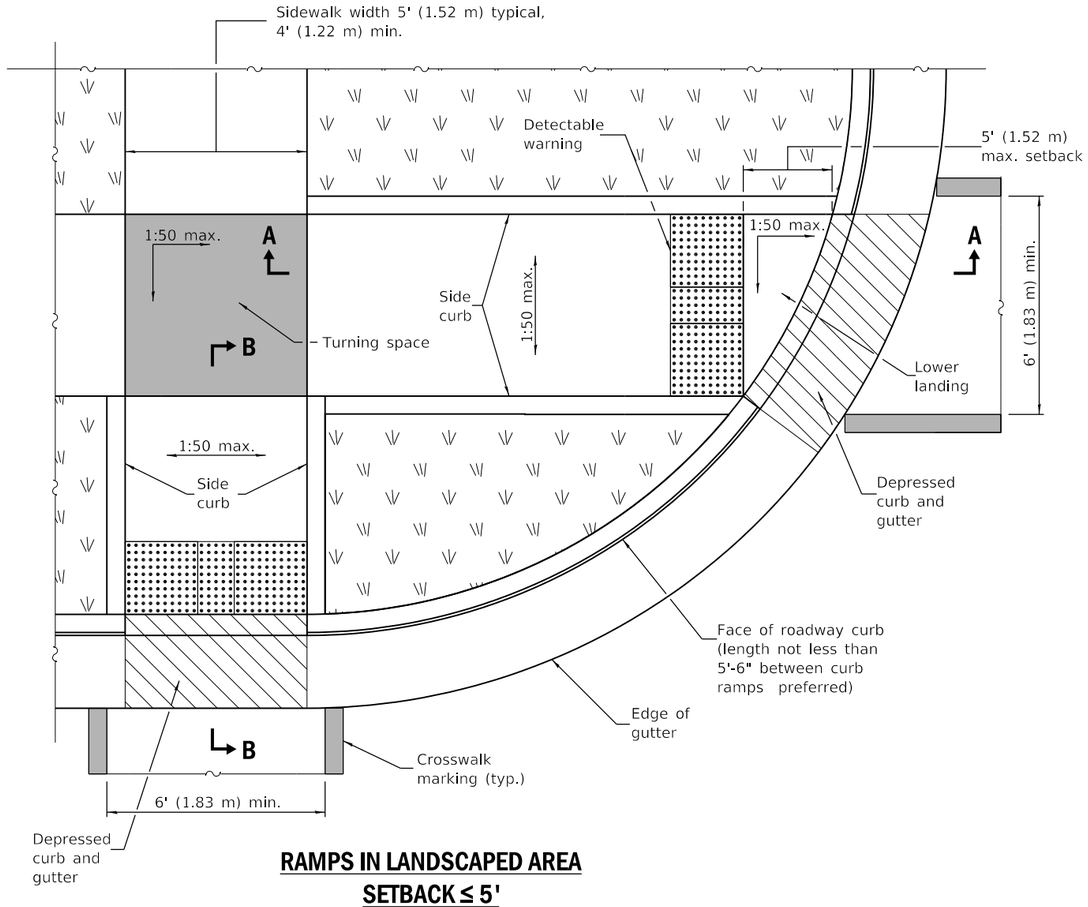

RAMPS IN LANDSCAPED AREA
SETBACK ≤ 5'

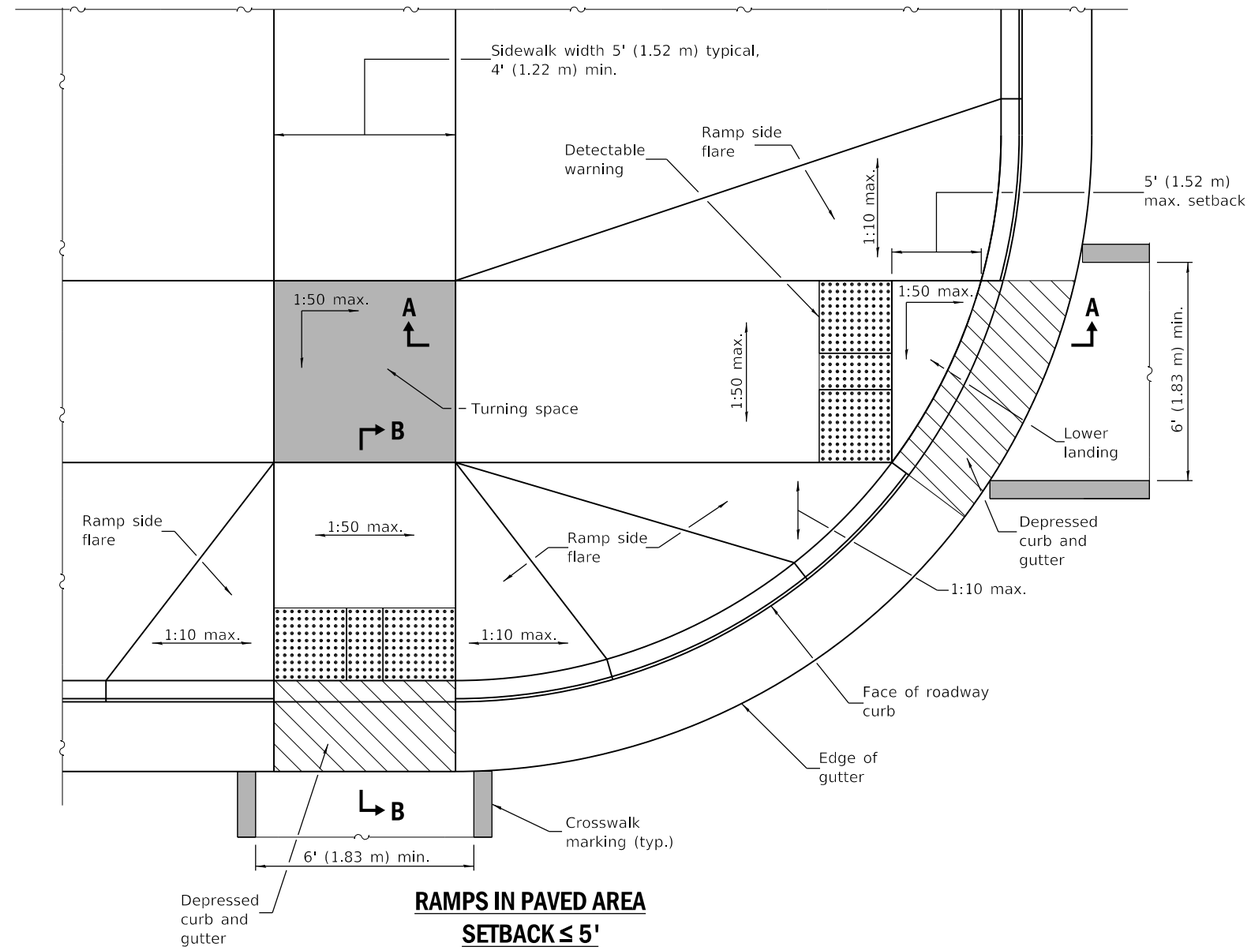

RAMPS IN PAVED AREA
SETBACK ≤ 5'

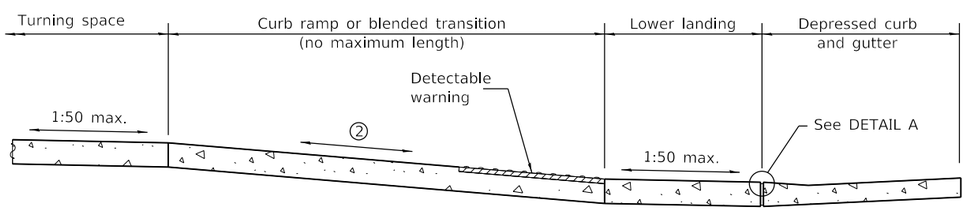

SECTION A-A

② The running slope of a curb ramp shall be 1:20 min. and 1:12 max. The running slope of a blended transition shall be 1:20 max.

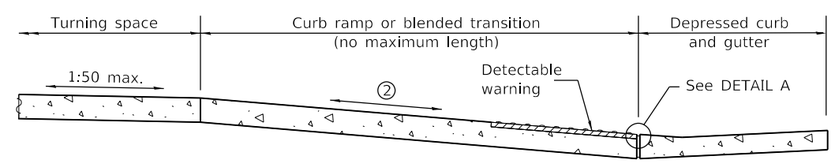

SECTION B-B

② The running slope of a curb ramp shall be 1:20 min. and 1:12 max. The running slope of a blended transition shall be 1:20 max.

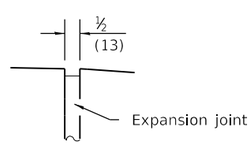

DETAIL A

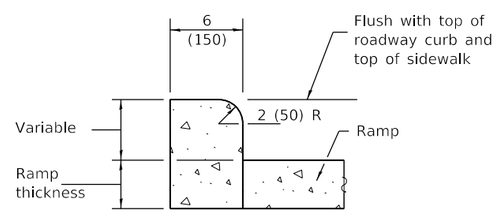

SIDE CURB DETAIL

See Sheet 2 for GENERAL NOTES.

DATE	REVISIONS
1-1-19	Removed "15-foot rule", added
	"Blended transitions" and placement
	tolerances for detectable warnings.
1-1-18	Omitted diagonal slope at
	turning spaces and lower
	landings.

PERPENDICULAR CURB RAMPS FOR SIDEWALKS

(Sheet 1 of 2)

STANDARD 424001-11

Illinois Department of Transportation

PASSED January 1, 2019
ENGINEER OF POLICY AND PROCEDURES

APPROVED January 1, 2019
ENGINEER OF DESIGN AND ENVIRONMENT

ISSUED 1-1-97

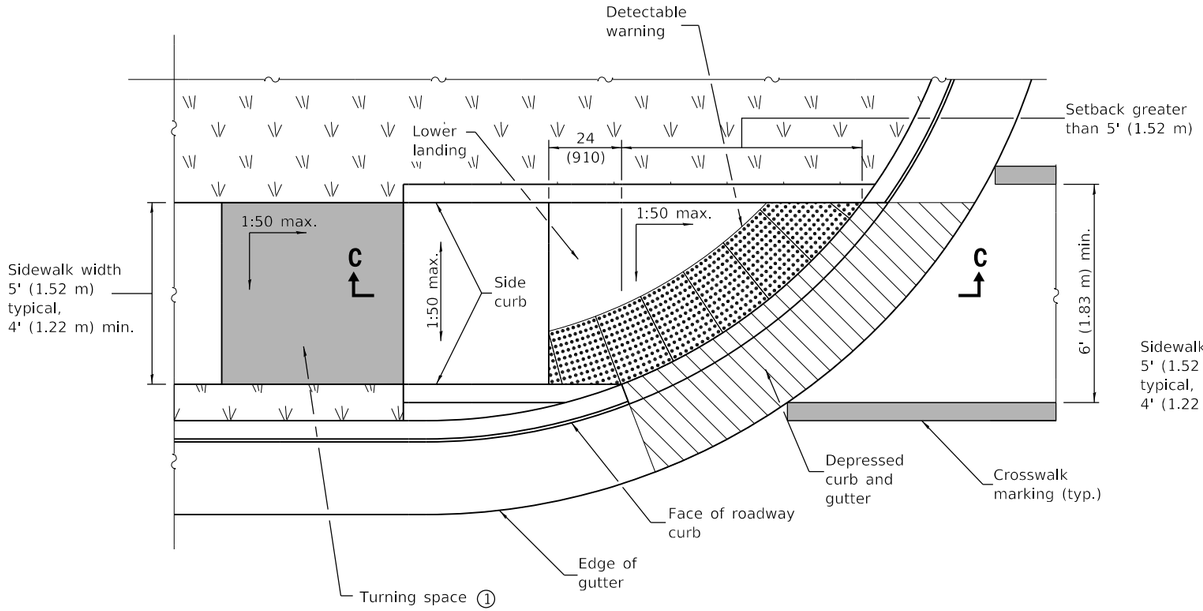

RAMP IN LANDSCAPED AREA SETBACK > 5'

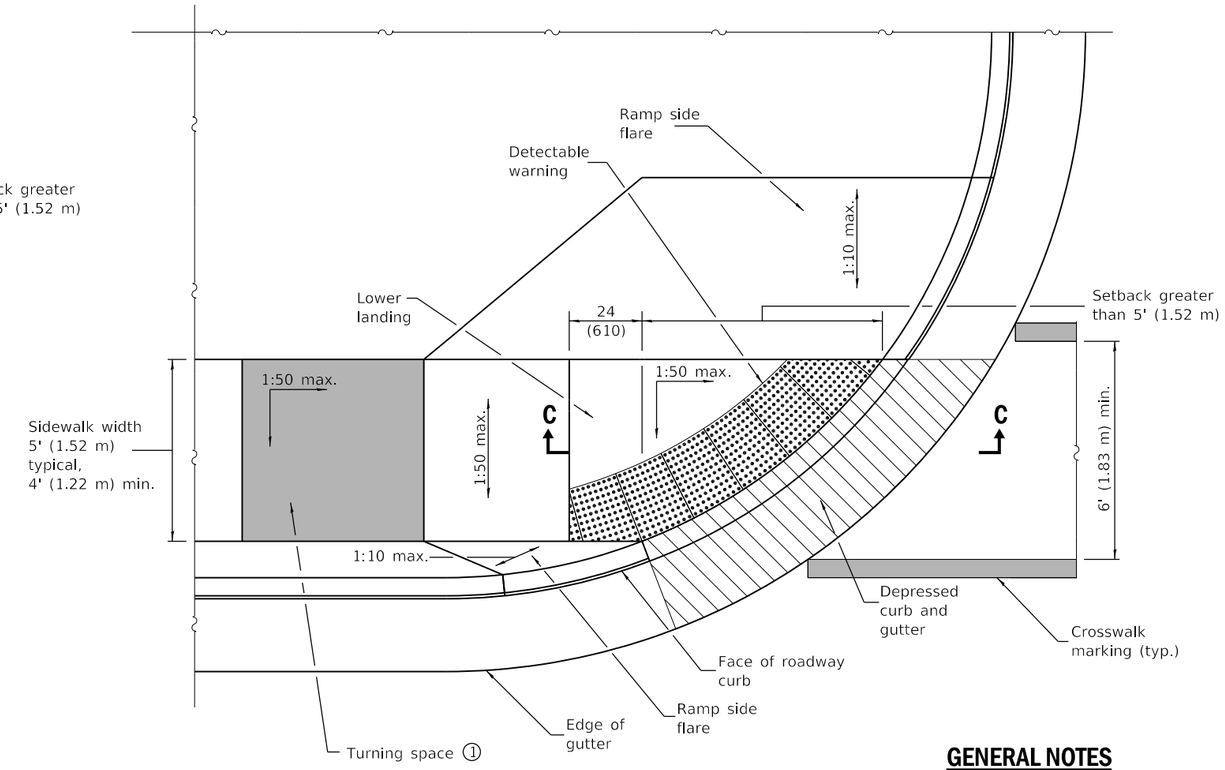

RAMP IN PAVED AREA SETBACK > 5'

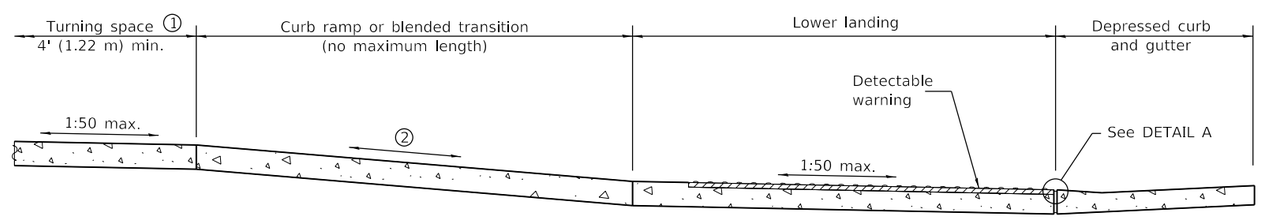

SECTION C-C

① This turning space not required for blended transitions.

② The running slope of a curb ramp shall be 1:20 min. and 1:12 max. The running slope of a blended transition shall be 1:20 max.

GENERAL NOTES

All slope ratios are expressed as units of vertical displacement to units of horizontal displacement (V:H).

Where the turning space is constrained on a side opposite a ramp, the minimum length of the turning space in the direction of the ramp-run shall be 5' (1.52 m).

Where 1:50 maximum slope is shown, 1:64 is preferred.

Detectable warnings are shown in their ideal locations but the following placement tolerances are allowed.

Side Border - Detectable warnings should extend the full width of the walking surface (excluding flared sides) but a border along each side up to 2 in. (50 mm) in width is allowed.

Curb Set-Back - Detectable warnings located at the back of curb should closely align with the curb but a gap up to 6 in. (150 mm) behind the curb is allowed.

See Standard 606001 for details of depressed curb adjacent to curb ramp.

All dimensions are in inches (millimeters) unless otherwise shown.

Illinois Department of Transportation

PASSED January 1, 2019
ENGINEER OF POLICY AND PROCEDURES

APPROVED January 1, 2019
ENGINEER OF DESIGN AND ENVIRONMENT

ISSUED 1-1-97

PERPENDICULAR CURB RAMPS FOR SIDEWALKS

(Sheet 2 of 2)

STANDARD 424001-11

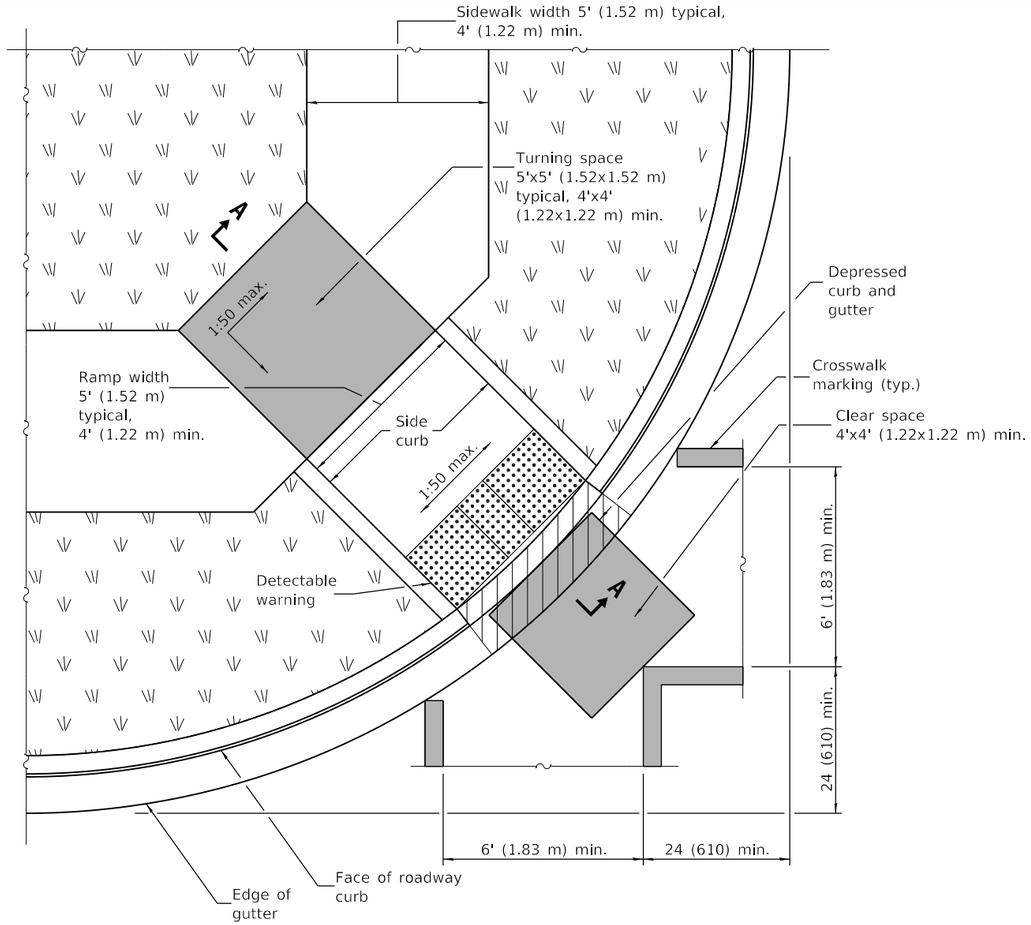

RAMP IN LANDSCAPED AREA

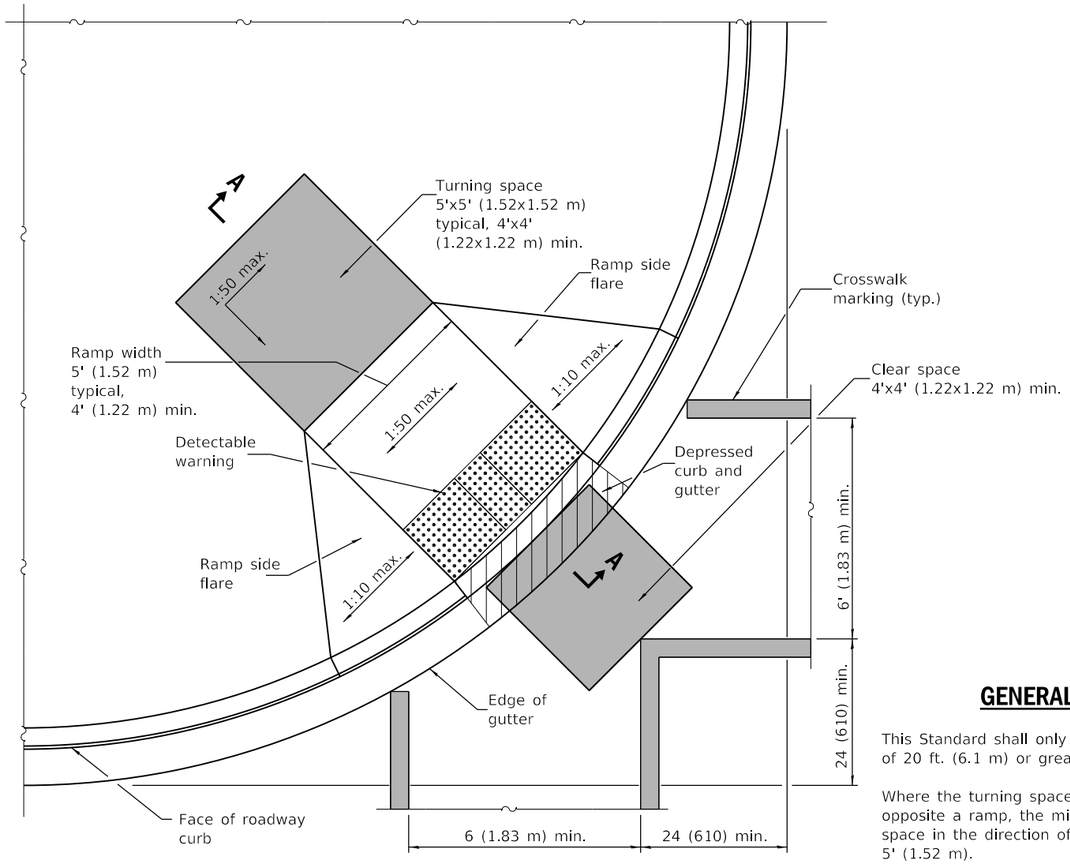

RAMP IN PAVED AREA

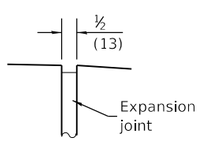

DETAIL A

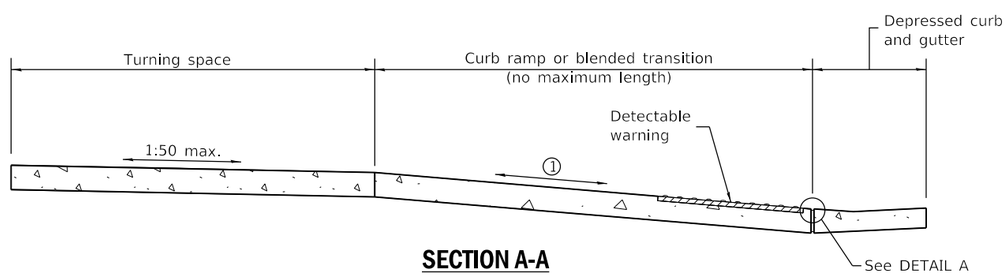

SECTION A-A

1 The running slope of a curb ramp shall be 1:20 min. and 1:12 max. The running slope of a blended transition shall be 1:20 max.

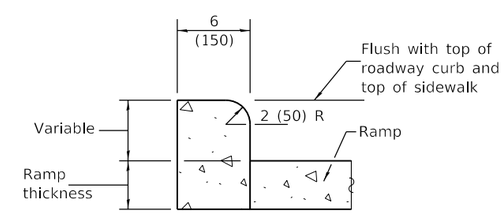

SIDE CURB DETAIL

GENERAL NOTES

This Standard shall only be used for curb radii of 20 ft. (6.1 m) or greater.

Where the turning space is constrained on a side opposite a ramp, the minimum length of the turning space in the direction of the ramp-run shall be 5' (1.52 m).

Where 1:50 maximum slope is shown, 1:64 is preferred.

Detectable warnings are shown in their ideal locations but the following placement tolerances are allowed.

Side Border - Detectable warnings should extend the full width of the walking surface (excluding flared sides) but a border along each side up to 2 in. (50 mm) in width is allowed.

Curb Set-Back - Detectable warnings located at the back of curb should closely align with the curb but a gap up to 6 in. (150 mm) behind the curb is allowed.

All slope ratios are expressed as units of vertical displacement to units of horizontal displacement (V:H).

See Standard 606001 for details of depressed curb adjacent to curb ramp.

All dimensions are in inches (millimeters) unless otherwise shown.

Illinois Department of Transportation

PASSED January 1, 2021
ENGINEER OF POLICY AND PROCEDURES

APPROVED January 1, 2021
ENGINEER OF DESIGN AND ENVIRONMENT

ISSUED 1-1-12

DATE	REVISIONS
1-1-21	Clarified minimum crosswalk width
	and locations.
1-1-19	Removed "15-foot rule", added
	"blended transitions" and placement
	tolerances for detectable warnings.

DIAGONAL CURB RAMPS FOR SIDEWALKS

STANDARD 424006-05

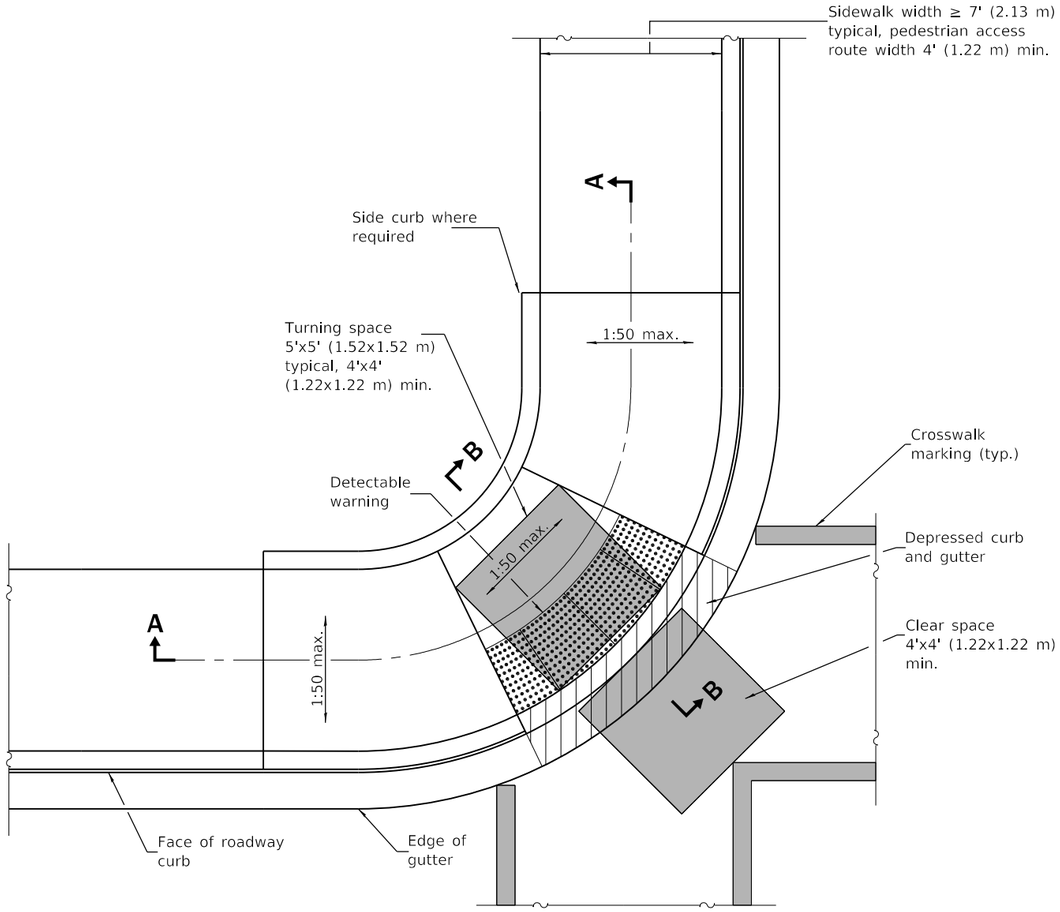

CORNER PARALLEL CURB RAMP

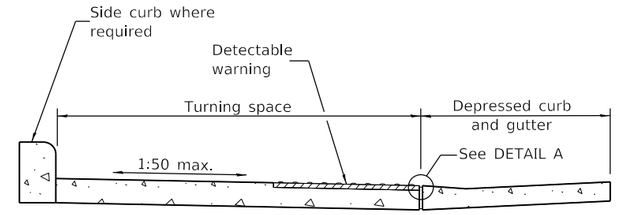

SECTION B-B

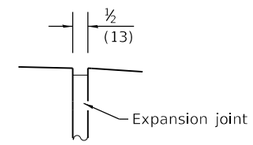

DETAIL A

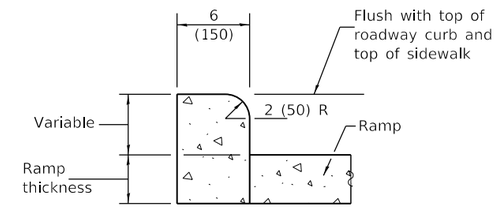

SIDE CURB DETAIL

GENERAL NOTES

All slope ratios are expressed as units of vertical displacement to units of horizontal displacement (V:H).

Where the turning space is constrained on a side opposite a ramp, the minimum length of the turning space in the direction of the ramp-run shall be 5' (1.52 m).

Where 1:50 maximum slope is shown, 1:64 is preferred.

Detectable warnings are shown in their ideal locations but the following placement tolerances are allowed.

Side Border - Detectable warnings should extend the full width of the walking surface (excluding flared sides) but a border along each side up to 2 in. (50 mm) in width is allowed.

Curb Set-Back - Detectable warnings located at the back of curb should closely align with the curb but a gap up to 6 in. (150 mm) behind the curb is allowed.

See Standard 606001 for details of depressed curb adjacent to curb ramp.

All dimensions are in inches (millimeters) unless otherwise shown.

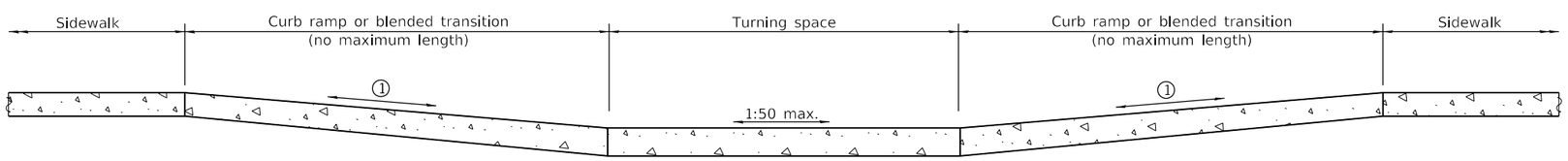

SECTION A-A

① The running slope of a curb ramp shall be 1:20 min. and 1:12 max. The running slope of a blended transition shall be 1:20 max.

Illinois Department of Transportation

PASSED January 1, 2019
ENGINEER OF POLICY AND PROCEDURES

APPROVED January 1, 2019
ENGINEER OF DESIGN AND ENVIRONMENT

ISSUED 1-1-12

DATE	REVISIONS
1-1-19	Removed upper landing, added
	blended transition and detectable
	warning tolerances.
1-1-17	Revised sidewalk width to
	include 24 (610) buffer
	behind curb.

CORNER PARALLEL CURB RAMPS FOR SIDEWALKS

STANDARD 424011-04

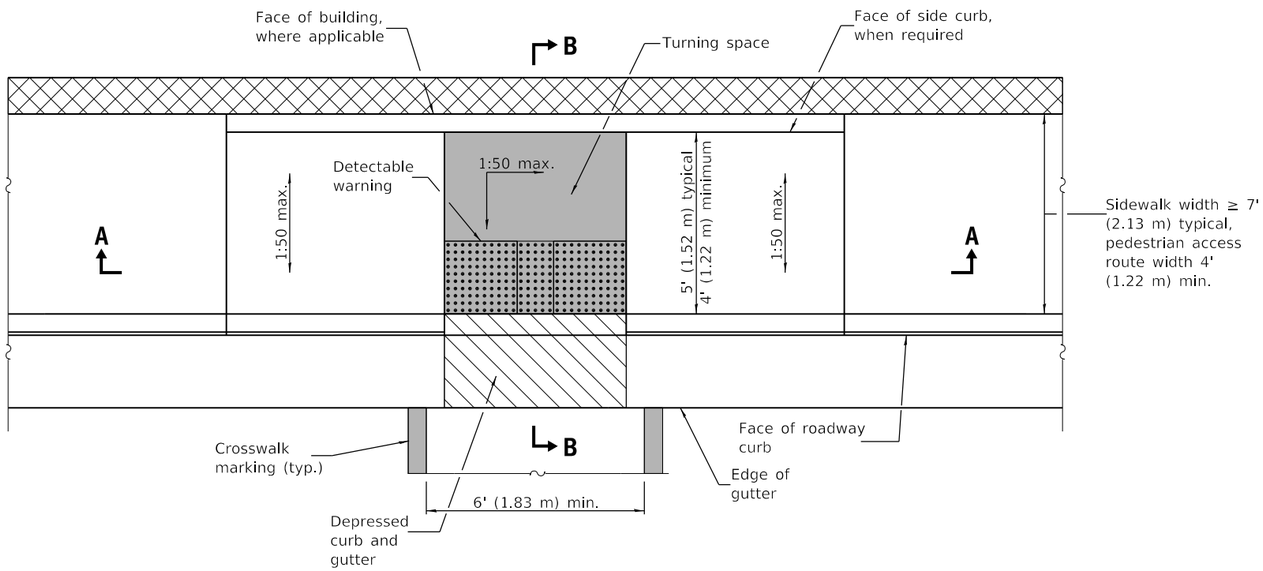

PARALLEL MID-BLOCK CURB RAMP

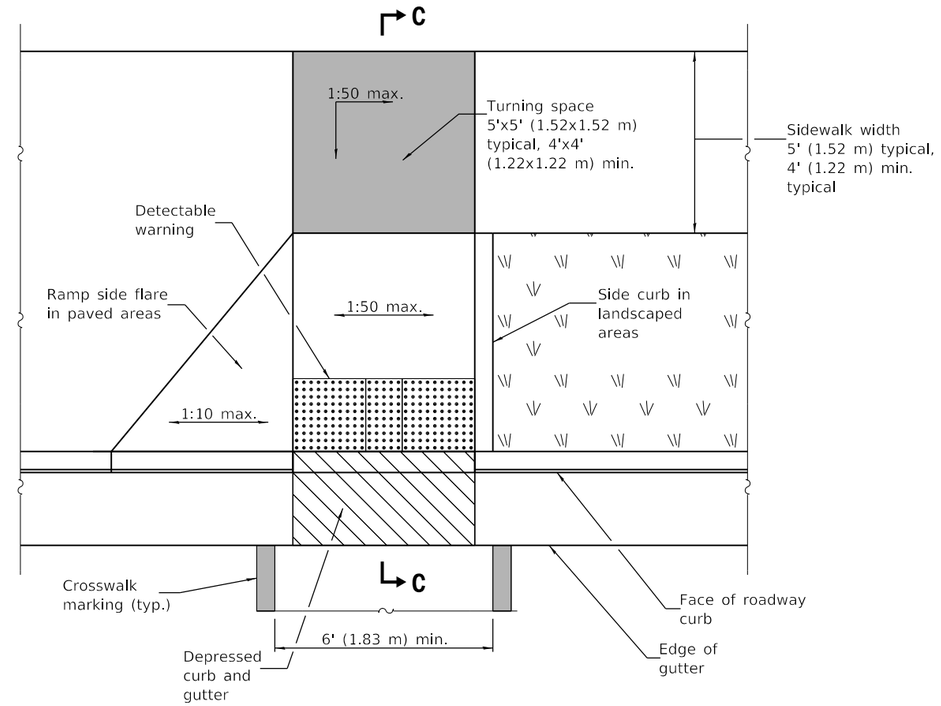

PERPENDICULAR MID-BLOCK CURB RAMP

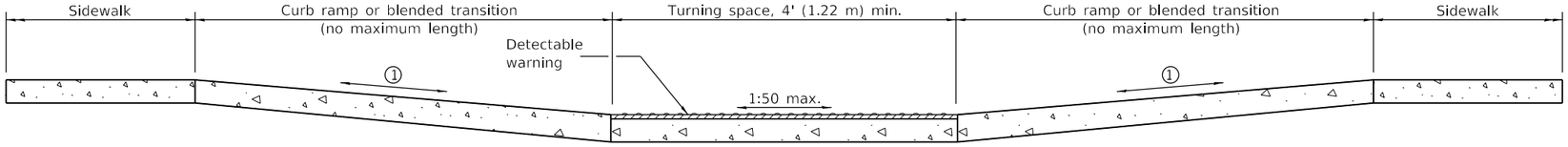

SECTION A-A

1 The running slope of a curb ramp shall be 1:20 min. and 1:12 max. The running slope of a blended transition shall be 1:20 max.

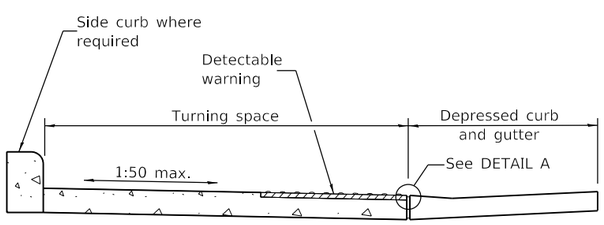

SECTION B-B

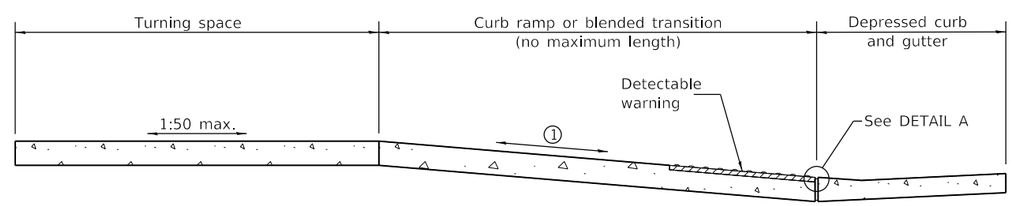

SECTION C-C

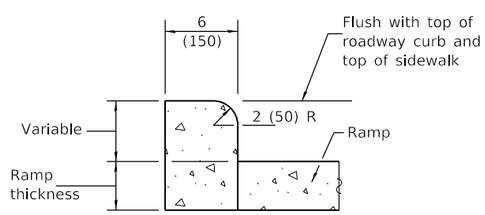

SIDE CURB DETAIL

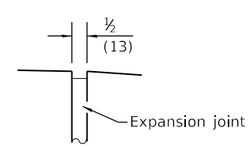

DETAIL A

GENERAL NOTES

All slope ratios are expressed as units of vertical displacement to units of horizontal displacement (V:H).

Where the turning space is constrained on a side opposite a ramp, the minimum length of the turning space in the direction of the ramp-run shall be 5' (1.52 m).

Where 1:50 maximum slope is shown, 1:64 is preferred.

Detectable warnings are shown in their ideal locations but the following placement tolerances are allowed.

Side Border - Detectable warnings should extend the full width of the walking surface (excluding flared sides) but a border along each side up to 2 in. (50 mm) in. width is allowed.

Curb Set-Back - Detectable warnings located at the back of curb should closely align with the curb but a gap up to 6 in. (150 mm) behind the curb is allowed.

See Standard 606001 for details of depressed curb adjacent to curb ramp.

All dimensions are in inches (millimeters) unless otherwise shown.

Illinois Department of Transportation

PASSED January 1, 2019
ENGINEER OF POLICY AND PROCEDURES

APPROVED January 1, 2019
ENGINEER OF DESIGN AND ENVIRONMENT

ISSUED 1-1-12

DATE	REVISIONS
1-1-19	Removed upper landing, added
	blended transitions and detectable
	warning tolerances.
1-1-18	Omitted diagonal slope at
	turning spaces and upper
	landings.

MID-BLOCK CURB RAMPS FOR SIDEWALKS

STANDARD 424016-05

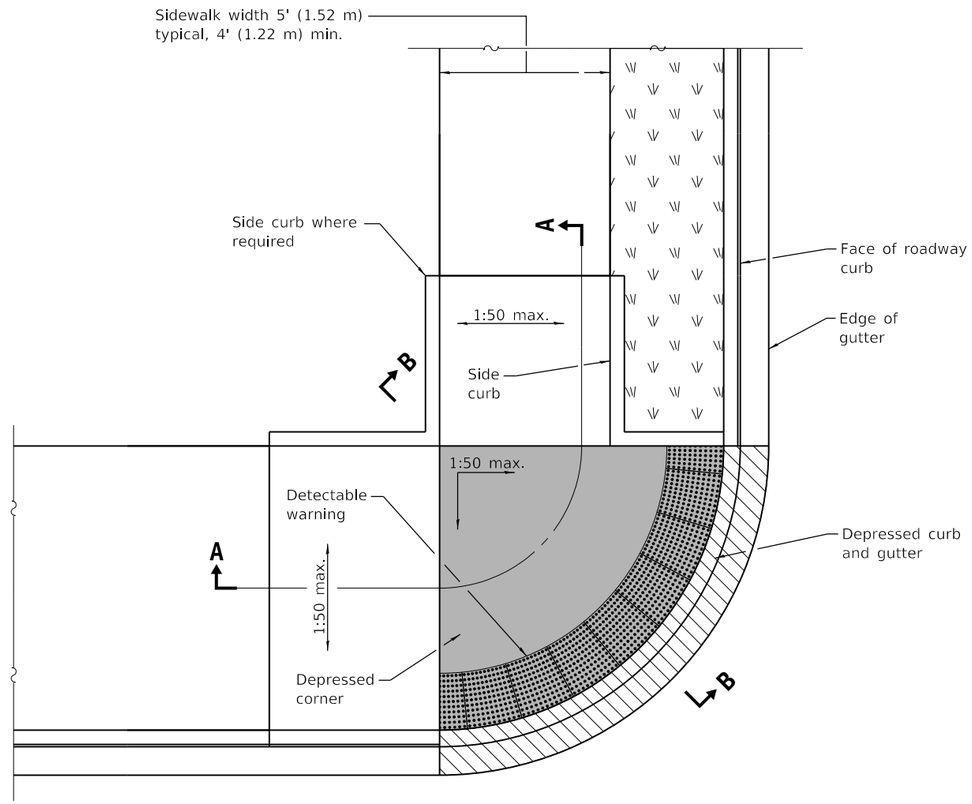

DEPRESSED CORNER

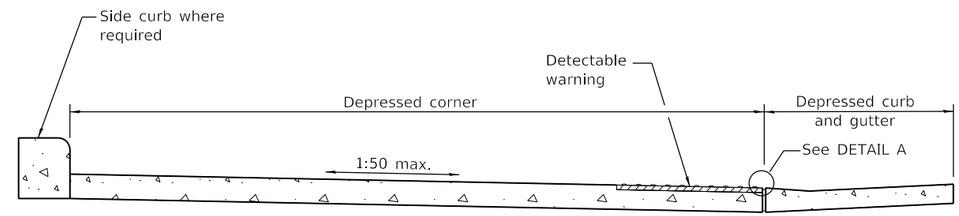

SECTION B-B

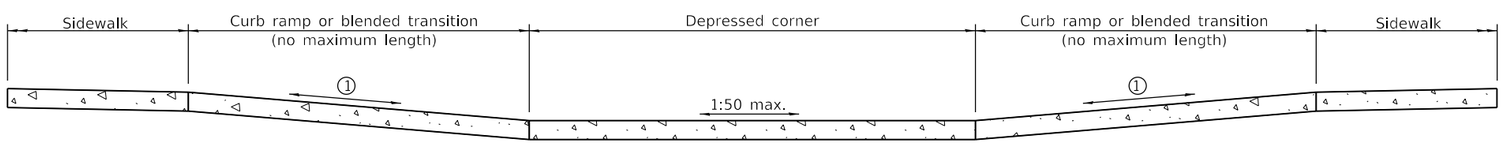

SECTION A-A

1 The running slope of a curb ramp shall be 1:20 min. and 1:12 max. The running slope of a blended transition shall be 1:20 max.

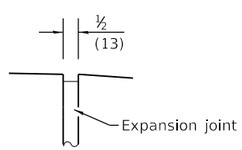

DETAIL A

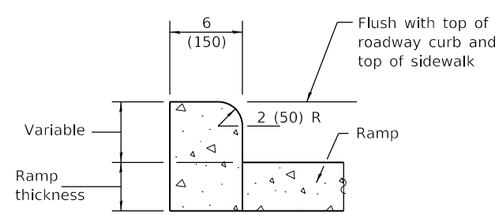

SIDE CURB DETAIL

GENERAL NOTES

This standard shall only be used for curb radii of 6 ft. (1.83 m) or greater.

All slope ratios are expressed as units of vertical displacement to units of horizontal displacement (V:H).

Where 1:50 maximum slope is shown, 1:64 is preferred.

Detectable warnings are shown in their ideal tolerances but the following placement tolerances are allowed.

Side Border - Detectable warnings should extend the full width of the walking surface (excluding flared sides) but a border along each side up to 2 in. (50 mm) in. width is allowed.

Curb Set-Back - Detectable warnings located at the back of curb should closely align with the curb but a gap up to 6 in. (150 mm) behind the curb is allowed.

See Standard 606001 for details of depressed curb adjacent to curb ramp.

All dimensions are in inches (millimeters) unless otherwise shown.

Illinois Department of Transportation

PASSED January 1, 2019
ENGINEER OF POLICY AND PROCEDURES

APPROVED January 1, 2019
ENGINEER OF DESIGN AND ENVIRONMENT

ISSUED 1-1-12

DATE	REVISIONS
1-1-19	Removed upper landings, added
	blended transition and detectable
	warning tolerances.
1-1-18	Omitted diagonal slope at
	turning spaces and upper
	landings.

DEPRESSED CORNER FOR SIDEWALKS

STANDARD 424021-05

② Detectable warning shall only be installed at entrances/alleys with permanent traffic control devices (i.e. stop signs, signals).

③ Where possible, maintain the grade of the sidewalk across the entrance/alley to avoid the need for ramps and turning spaces.

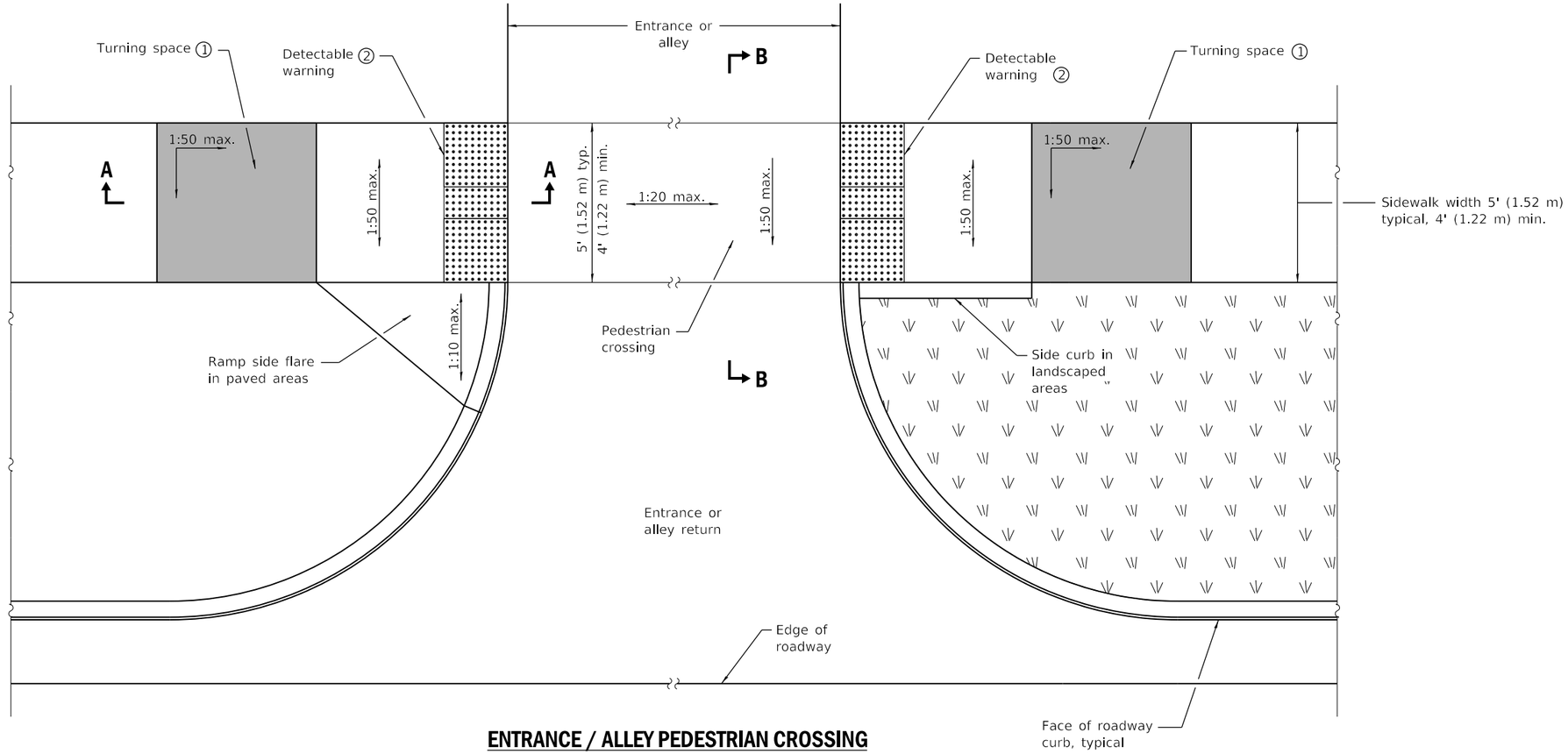

ENTRANCE / ALLEY PEDESTRIAN CROSSING

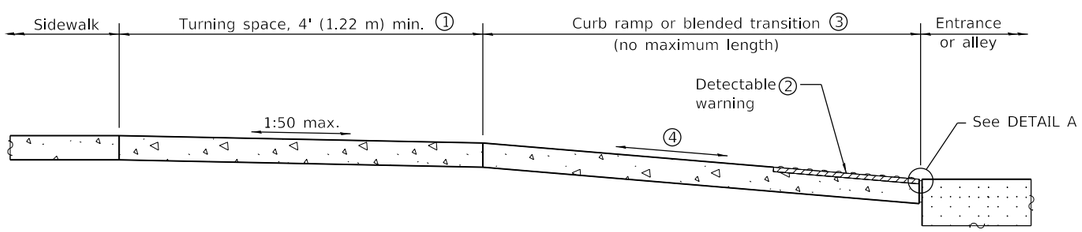

SECTION A-A

① Turning space not required for blended transitions.

④ The running slope of a curb ramp shall be 1:20 min and 1:12 max. The running slope of a blended transition shall be 1:20 max.

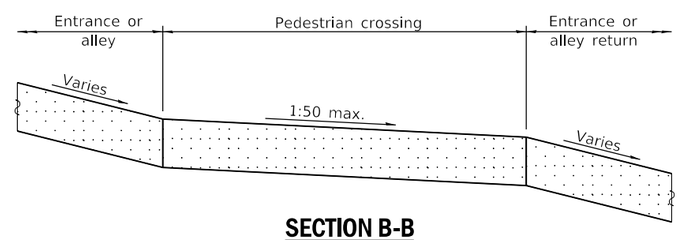

SECTION B-B

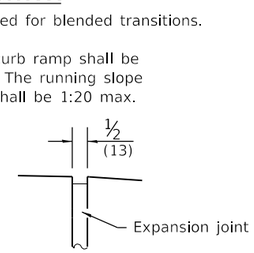

DETAIL A

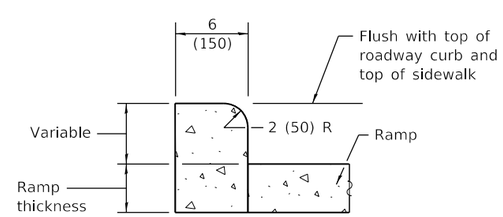

SIDE CURB DETAIL

GENERAL NOTES

All slope ratios are expressed as units of vertical displacement to units of horizontal displacement (V:H).

Where 1:50 maximum slope is shown, 1:64 is preferred.

Detectable warnings are shown in their ideal locations but the following placement tolerances are allowed.

Side Border - Detectable warnings should extend the full width of the walking surface (excluding flared sides) but a border along each side up to 2 in. (50 mm) in width is allowed.

Curb Set-Back - Detectable warnings located at the back of curb should closely align with the curb but a gap up to 6 in. (150 mm) behind the curb is allowed.

All dimensions are in inches (millimeters) unless otherwise shown.

Illinois Department of Transportation

PASSED January 1, 2019
ENGINEER OF POLICY AND PROCEDURES

APPROVED January 1, 2019
ENGINEER OF DESIGN AND ENVIRONMENT

ISSUED 1-1-12

DATE	REVISIONS
1-1-19	Added blended transitions and
	placement tolerances for
	detectable warnings.
1-1-18	Omitted diagonal slope at
	upper landings.

ENTRANCE / ALLEY PEDESTRIAN CROSSINGS

STANDARD 424026-03

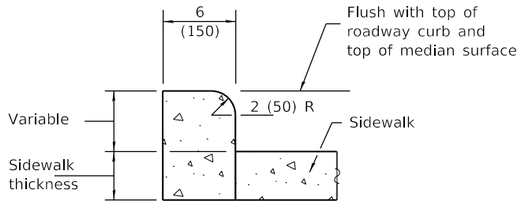

SIDE CURB DETAIL

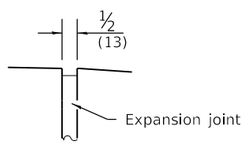

DETAIL A

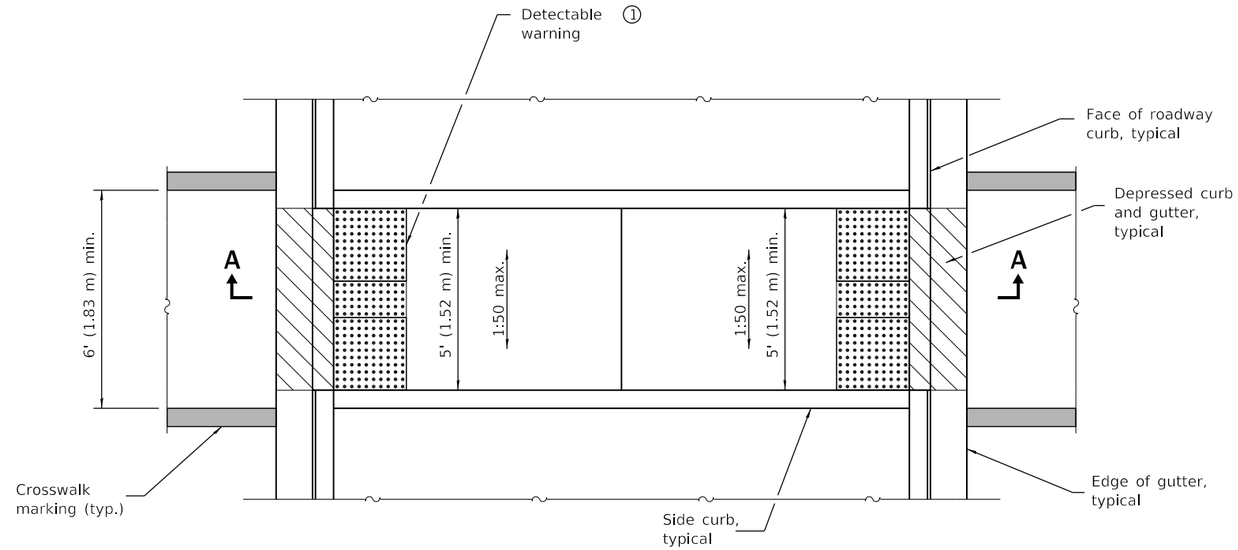

MEDIAN PEDESTRIAN CROSSING

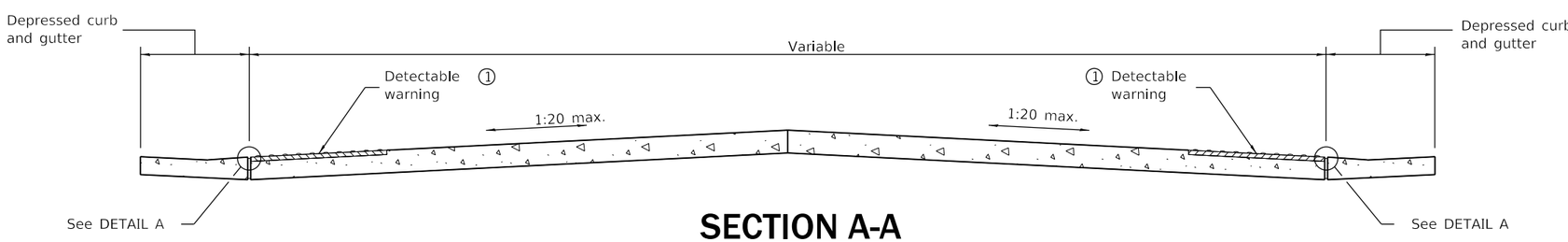

SECTION A-A

① Omit detectable wornings when distance between back of curbs is less than 6' (1.83 m).

GENERAL NOTES

All slope ratios are expressed as units of vertical displacement to units of horizontal displacement (V:H).

Where 1:50 maximum slope is shown, 1:64 is preferred.

Detectable warnings are shown in their ideal locations but the following placement tolerances are allowed.

Side Border - Detectable warnings should extend the full width of the walking surface (excluding flared sides) but a border along each side up to 2 in. (50 mm) in width is allowed.

Curb Set-Back - Detectable warnings located at the back of curb should closely align with the curb but a gap up to 6 in. (150 mm) behind the curb is allowed.

See Standard 606001 for details of depressed curb adjacent to curb ramp.

All dimensions are in inches (millimeters) unless otherwise shown.

Illinois Department of Transportation

PASSED January 1, 2019
ENGINEER OF POLICY AND PROCEDURES

APPROVED January 1, 2019
ENGINEER OF DESIGN AND ENVIRONMENT

ISSUED 1-1-12

DATE	REVISIONS
1-1-19	Added placement tolerances for
	detectable warnings.
1-1-12	Widened crosswalk to 6'
	(1.83 m) min. inside dimension.
	Revised General Notes.

MEDIAN PEDESTRIAN CROSSINGS

STANDARD 424031-02

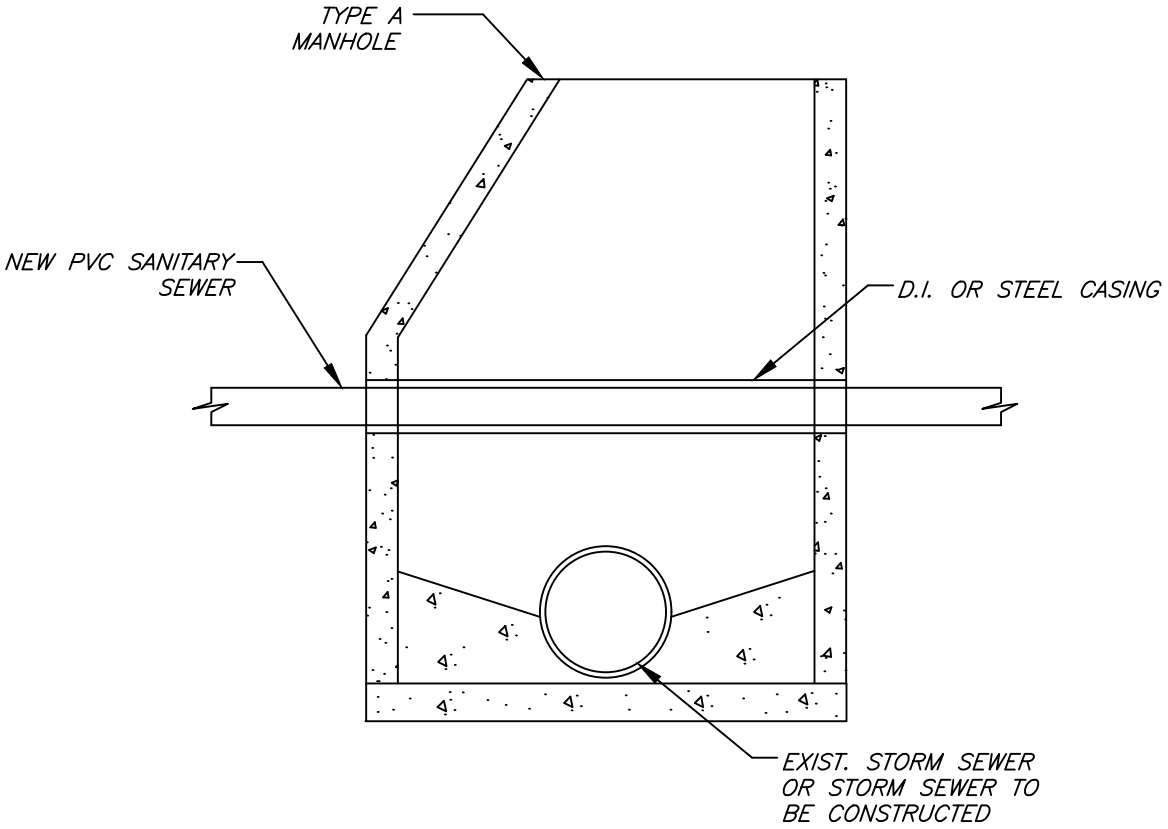

GENERAL NOTES

1. NEW PVC SANITARY SEWER TO BE ASTM 2241.
2. HOLES FOR SANITARY CASING AND MAIN TO BE CORED INTO STRUCTURE WALLS & RESTORED WITH HYDRAULIC CEMENT.

N.T.S.	DATE	REVISIONS	DRAWN BY	APPVD BY	STANDARD DETAIL
Village of DOWNERS GROVE FOUNDED IN 1832	03/25/11		S.A.V.	A.J.S.	CONFLICT MANHOLE (SANITARY)
	03/01/15		S.A.V.	A.J.S.	
	01/01/17		N.R.H.	J.M.W.	
	01/01/18		N.R.H.	J.M.W.	
	DRAWING NO. STM-02				
	I:\LIBRARY\DETAILS\STORM\STM-02				

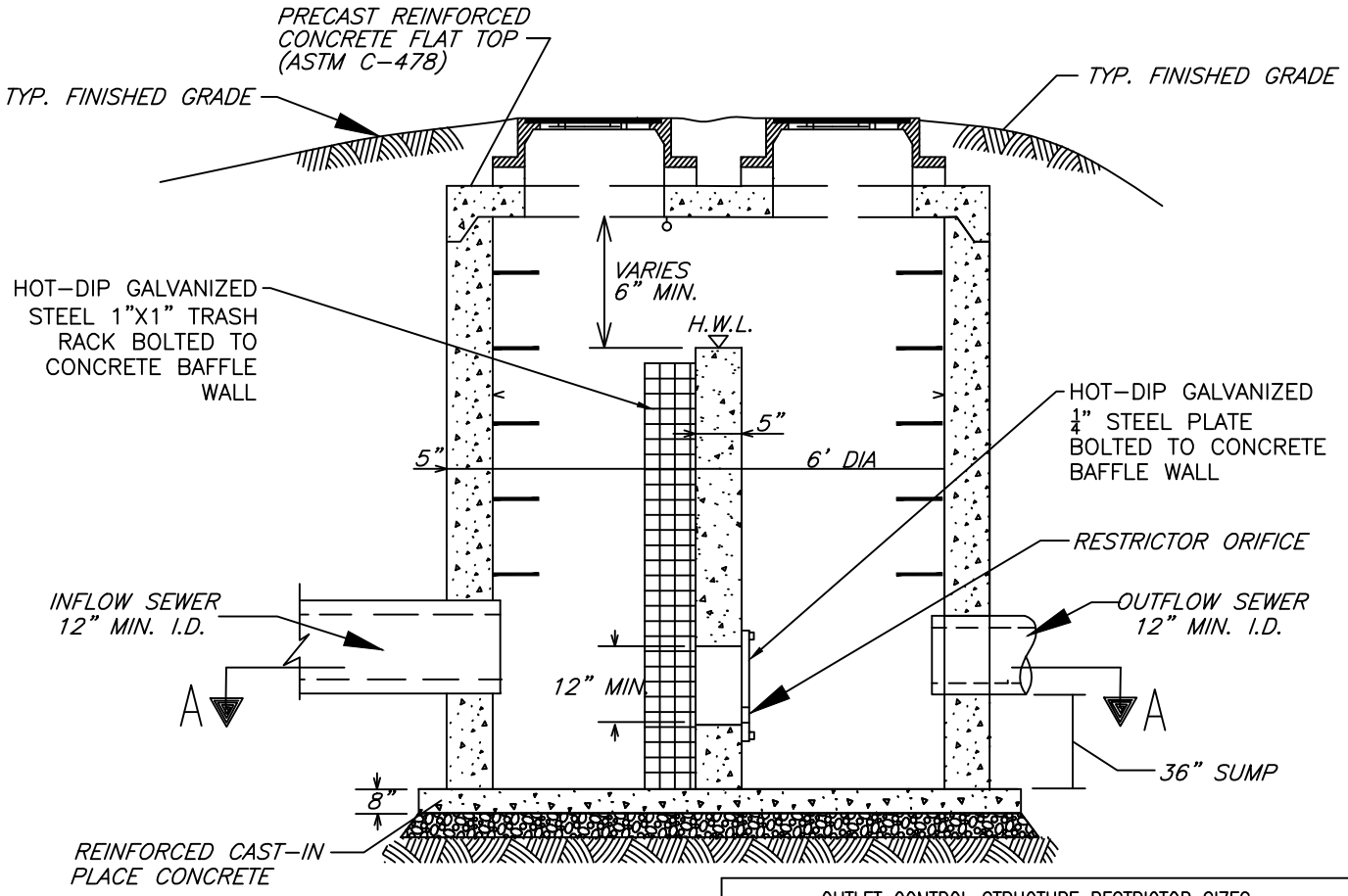

OUTLET CONTROL STRUCTURE RESTRICTOR SIZES			
BASIN #	OCS #	RESTRICTOR SIZE & ELEVATION	100 YR HWL
1	1		

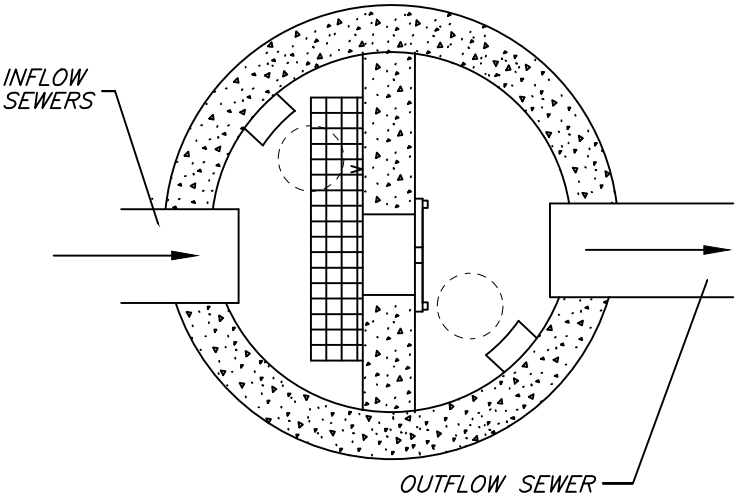

SECTION A-A

NOTES:

1. STRUCTURAL DESIGN DETAILS TO BE PROVIDED BY MANUFACTURER'S LICENSED STRUCTURAL ENGINEER, INCLUDING PROVISIONS FOR TRUCK LOADING AND HYDRAULIC FORCES.
2. CONTRACTOR MUST VERIFY ELEVATIONS AND DIMENSIONS. ANY DISCREPANCY FROM PLAN ELEV. AND DIMENSIONS SHALL BE CORRECTED AT CONTRACTOR COST.
3. THIS STRUCTURE IS NOT TO BE LOCATED WITHIN AN OVERFLOW WEIR.
4. SEE IDOT STANDARD 602701 FOR DETAILS OF MANHOLE STEPS.
5. FASTENERS FOR TRASH RACK AND ORIFICE PLATE SHALL BE GALV. OR STAINLESS STEEL.
6. RESTRICTOR SIZE, ELEVATION, AND 100 YR OVERFLOW WEIR. HWL TO BE DETERMINED BY ENGINEER ON RECORD.

N.T.S.	DATE	REVISIONS	DRAWN BY	APPVD BY	STANDARD DETAIL
Village of DOWNERS GROVE FOUNDED IN 1832	06/09/04		R.W.B.	M.D.M.	OUTLET CONTROL STRUCTURE – 6'
	03/25/11		S.A.V.	A.J.S.	
	03/01/15		A.J.S.	A.J.S.	
	01/01/17		N.R.H.	J.M.W.	
	01/01/18		N.R.H.	J.M.W.	
	DRAWING NO. STM-03				
	I:\LIBRARY\DETAILS\STORM\STM-03				

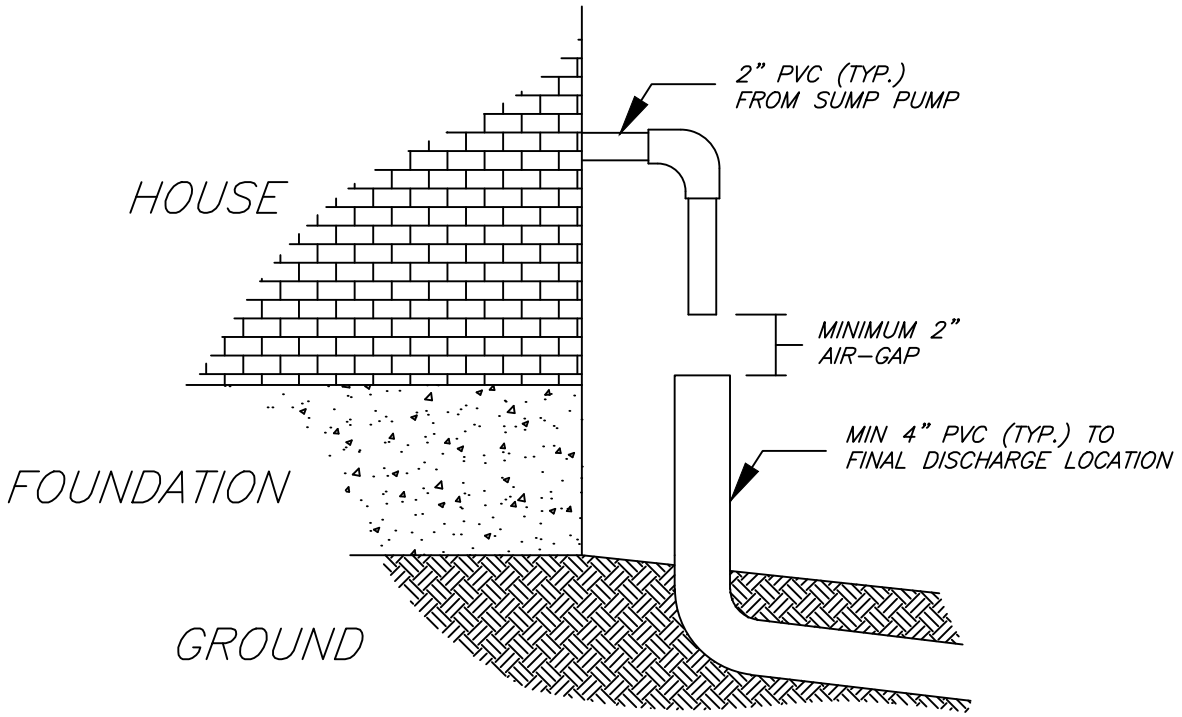

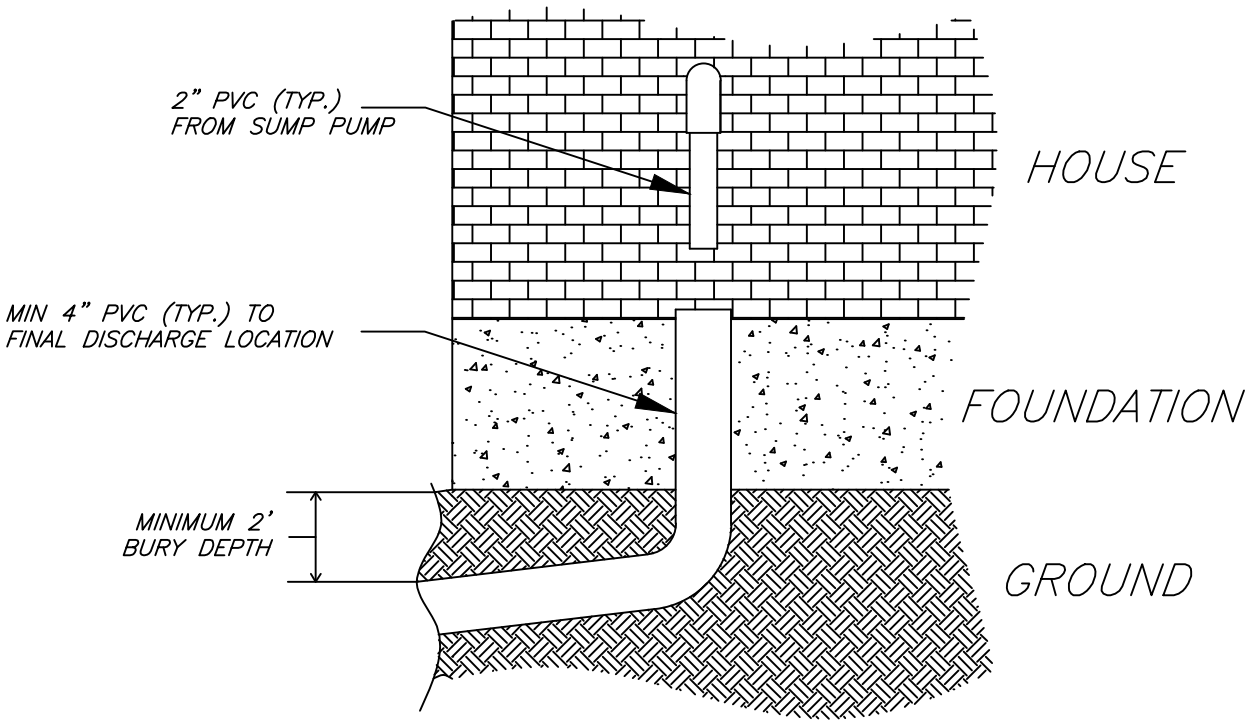

N.T.S.	DATE	REVISIONS	DRAWN BY	APPVD BY	STANDARD DETAIL
Village of DOWNERS GROVE FOUNDED IN 1832	02/27/07		J.M.L.	M.D.M.	SUMP PUMP AIR-GAP
	03/25/11		S.A.V.	A.J.S.	
	03/01/15		A.J.S.	A.J.S.	
	01/01/17		N.R.H.	J.M.W.	
	01/01/18		N.R.H.	J.M.W.	
	DRAWING NO. STM-09				
	I:\LIBRARY\DETAILS\STORM\STM-09				

ROLLED EROSION CONTROL PRODUCTS

Staking Pattern Guide

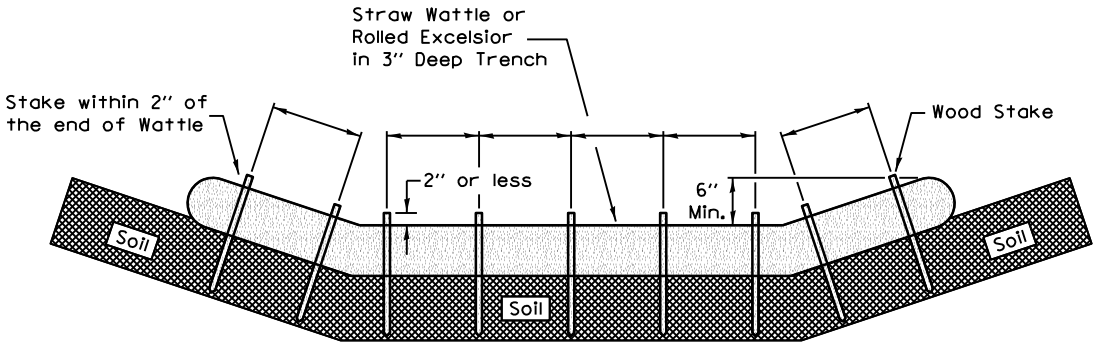

Notes:

1. Overlap minimum is the diameter of the roll.
2. 4' spacing for wattles.
3. 2' spacing for rolled excelsior.
4. Or space according to manufacturer's specifications.

Stake Detail

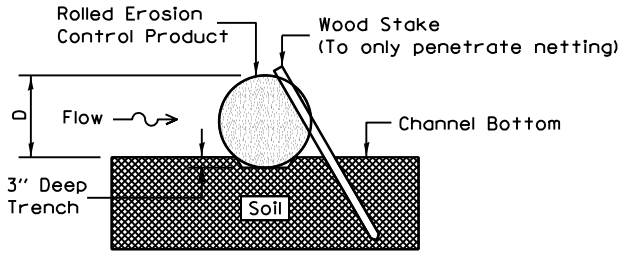

Compost Filter Sock Detail

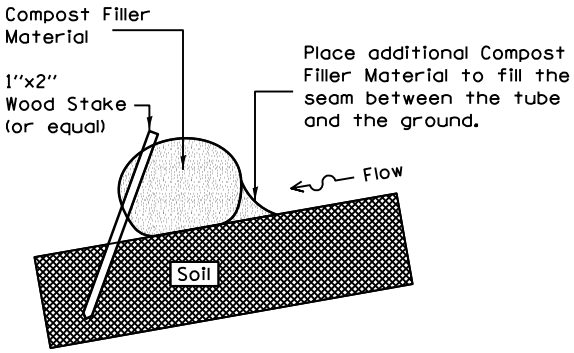

When compost filter sock ditch check is used, place a compost berm upstream of the filter sock (see IUM 805). A trench is not required.

Notes:

1. Drawings are not to scale.
2. Ends of wattles or rolled excelsior shall be turned at least 6" upslope.
3. Recommended stakes are 1 1/8" wide x 1 1/8" thick x 30" long
4. Stakes shall not extend above the straw wattle more than 2".
5. Spacing: The toe of the upstream ditch check shall create a horizontal line with the top of the downstream ditch check.
6. When compost filter sock ditch check is used, place a compost berm upstream of the filter sock (see IUM 805). A trench is not required.

REFERENCE		STANDARD DWG. NO.
Project _____		IUM-514
Designed _____ Date _____		SHEET 1 OF 1
Checked _____ Date _____		DATE 8-19-11
Approved _____ Date _____		

INLET PROTECTION - PAVED AREAS
CURB PROTECTION

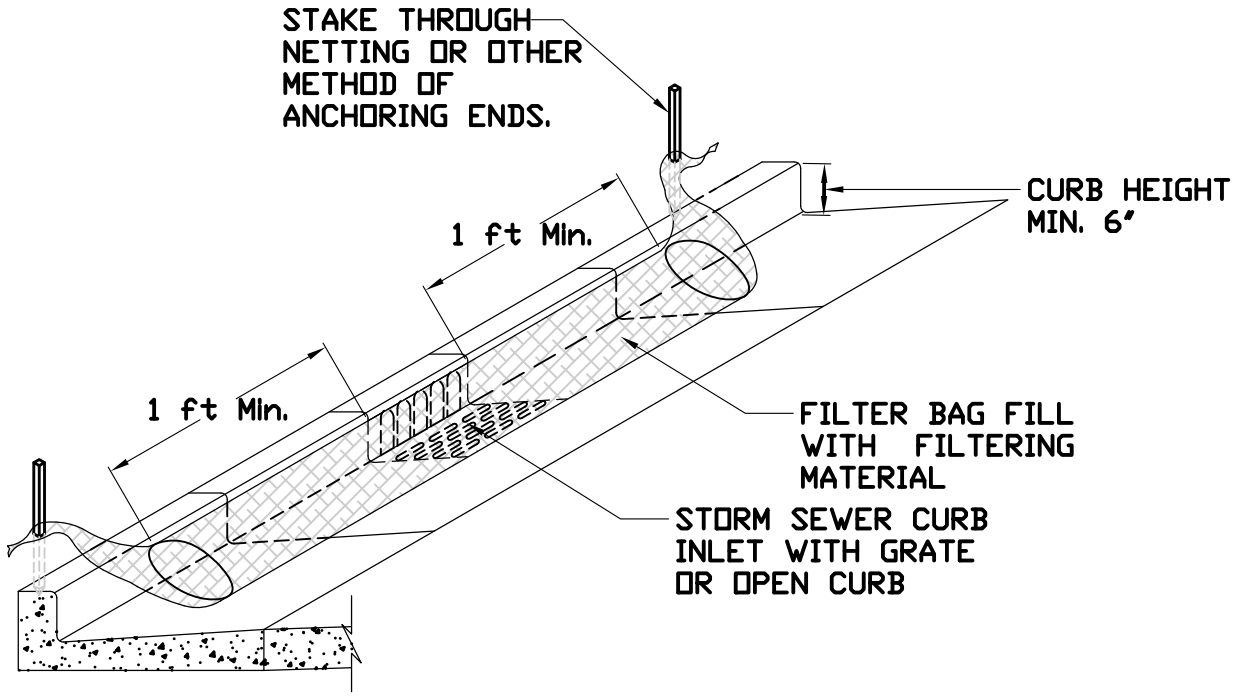

REFERENCE
Project _____
Designed _____ Date _____
Checked _____ Date _____
Approved _____ Date _____

STANDARD DWG. NO.
IUM-561C
SHEET 1 OF 1
DATE 01-11-11

INLET PROTECTION - PAVED AREAS
DROP-IN PROTECTION

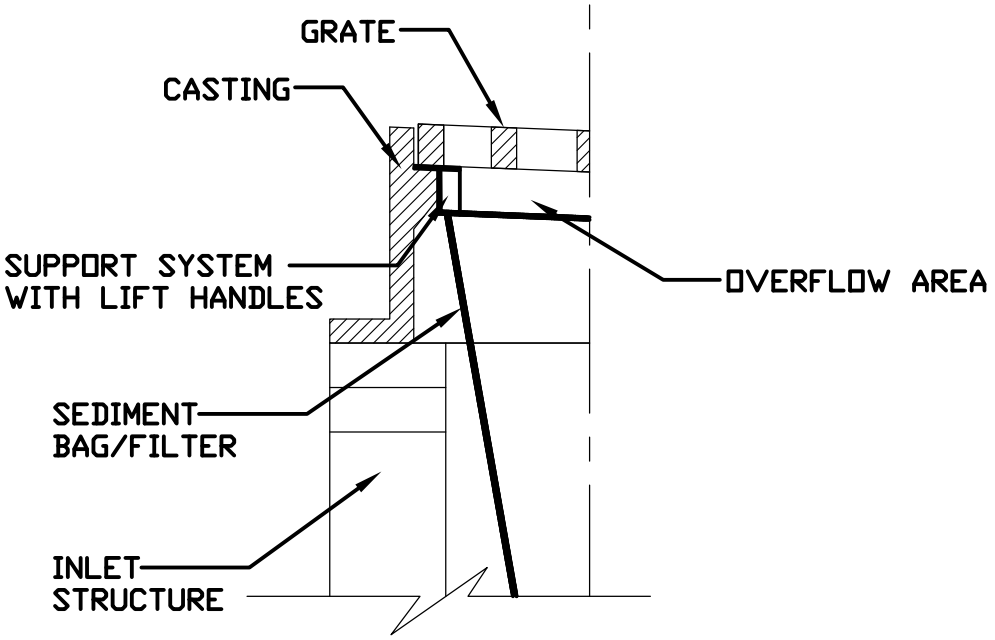

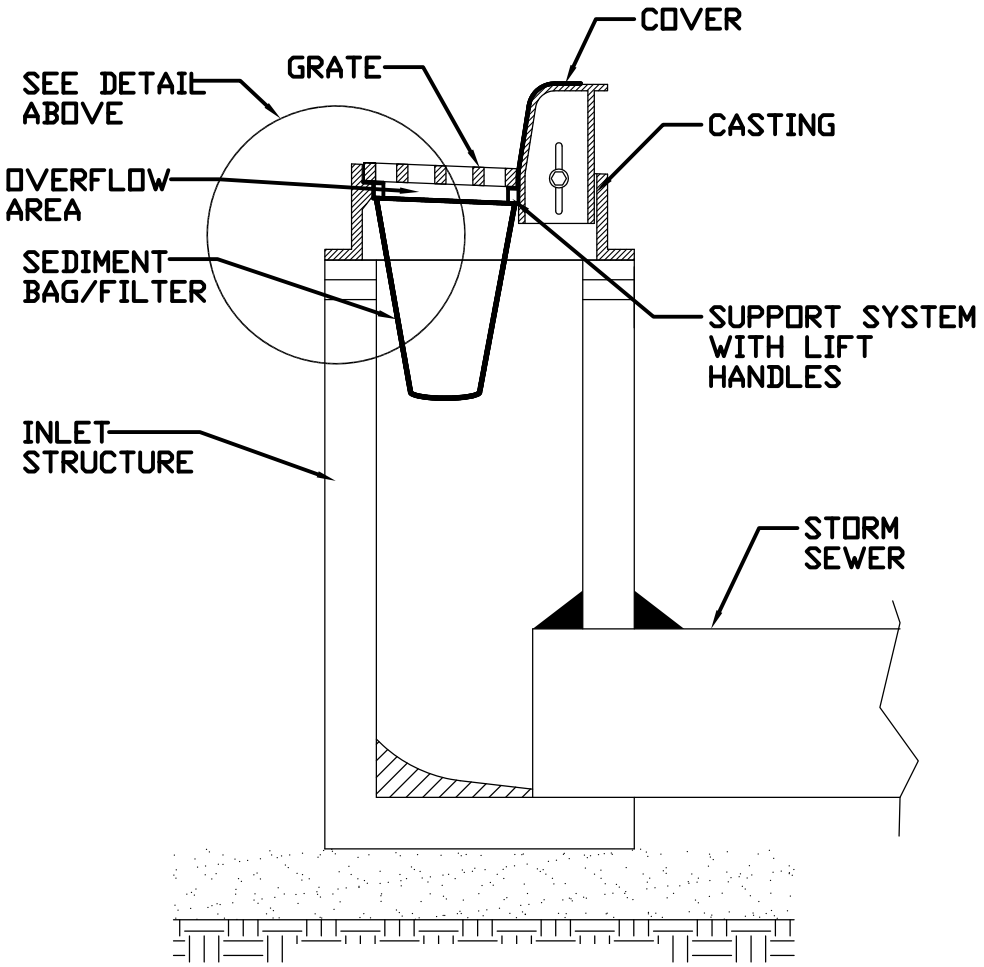

REFERENCE			STANDARD DWG. NO.
Project			IUM-561D
Designed	Date		SHEET 1 OF 1
Checked	Date		DATE 01-11-11
Approved	Date		

SILT FENCE PLAN

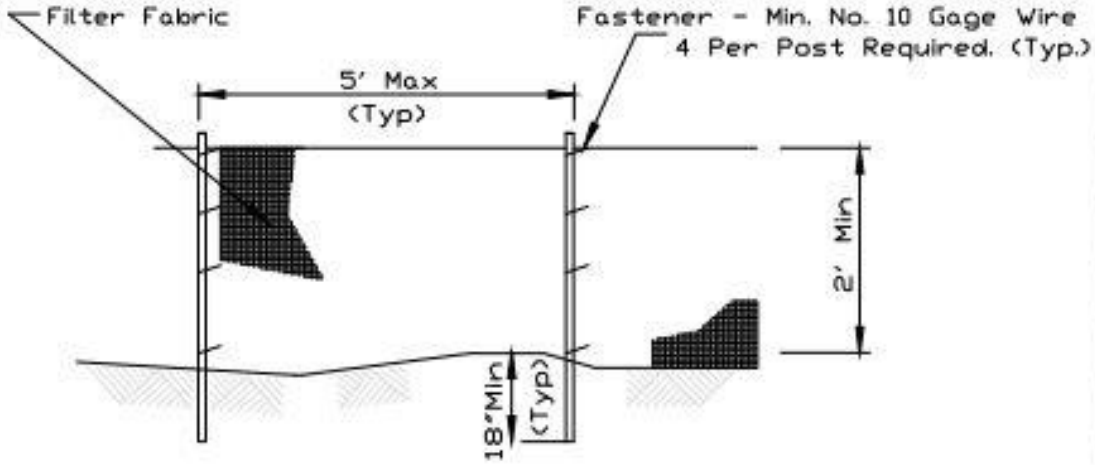

ELEVATION

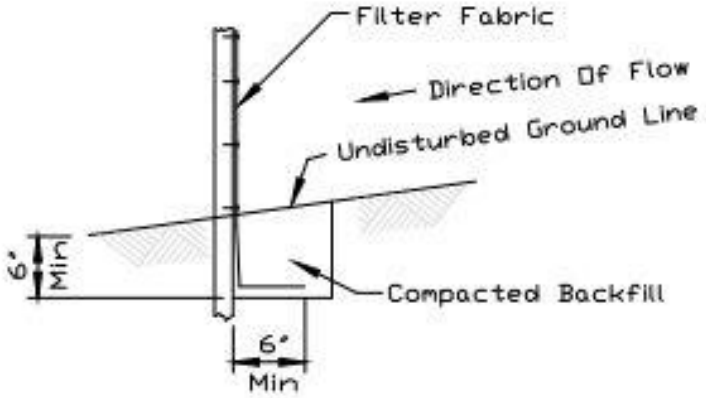

FABRIC ANCHOR DETAIL

NOTES:

1. Temporary sediment fence shall be installed prior to any grading work in the area to be protected. They shall be maintained throughout the construction period and removed in conjunction with the final grading and site stabilization.
2. Filter fabric shall meet the requirements of material specification 592 Geotextile based upon performance needed.
3. Fence posts shall be either standard steel post or wood post with a minimum cross-sectional area of 2" x 2" nominal size.

REFERENCE		STANDARD DWG. NO.
Project		IUM-620
Designed	Date	SHEET 1 OF 2
Checked	Date	DATE 3-16-12
Approved	Date	

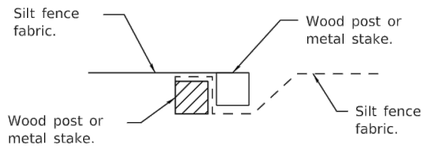

Place end-post (stake) of first silt fence adjacent to end-post (stake) of second silt fence with fabric positioned as swown.

STEP 1

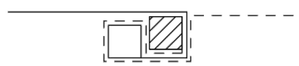

Rotate posts (stakes) together 180° clockwise and drive both posts (stakes) 18 (450) into ground.

STEP 2

ATTACHING TWO SILT FILTER FENCES

(Not applicable for J-hooks)

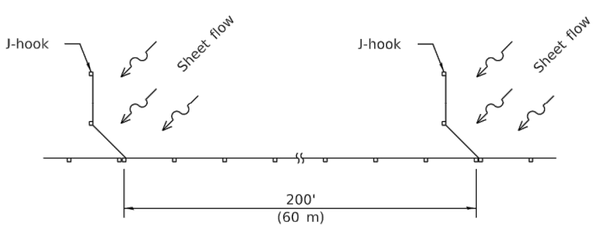

SILT FILTER J-HOOK PLACEMENT

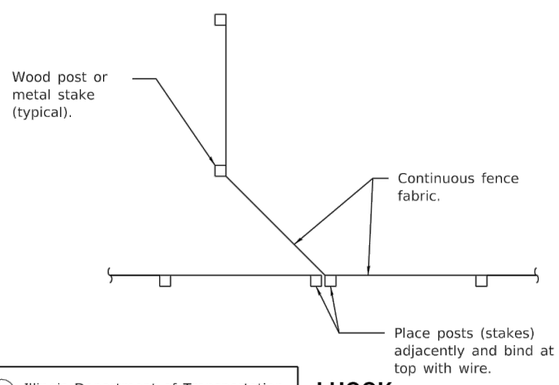

J-HOOK

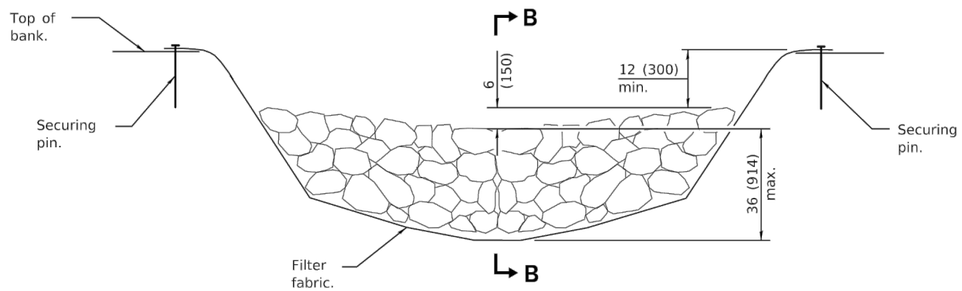

ELEVATION

* When the ditch check is within the clear zone and the road is open to traffic, the traffic approach slope of the aggregate shall be 1:4 (V:H).

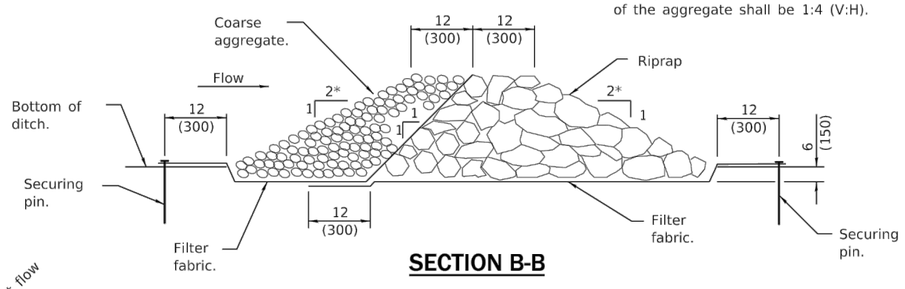

SECTION B-B

AGGREGATE DITCH CHECK

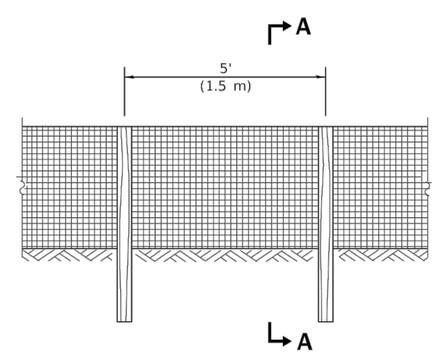

ELEVATION

SILT FILTER FENCE AS A PERIMETER EROSION BARRIER

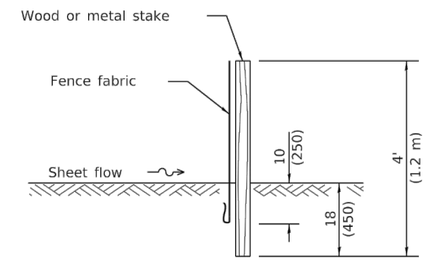

SLICE METHOD

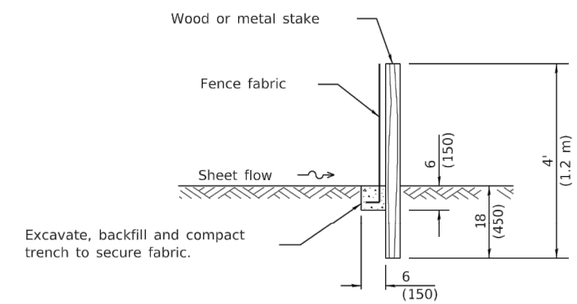

TRENCH METHOD

SECTION A-A

GENERAL NOTES

The installation details and dimensions shown for perimeter erosion barriers shall also apply for inlet and pipe protection.

All dimensions are in inches (millimeters) unless otherwise shown.

Illinois Department of Transportation

PASSED January 1, 2013
Michael Brand
ENGINEER OF POLICY AND PROCEDURES
APPROVED January 1, 2013
ENGINEER OF DESIGN AND ENVIRONMENT

ISSUED 1-1-97

DATE	REVISIONS
1-1-13	Corrected notation for
	flowline (℄) on SEDIMENT
	BASIN ELEVATION.
1-1-12	Omitted hay/straw perimeter
	barrier. Added SLICE METHOD
	to SECTION A-A.

TEMPORARY EROSION CONTROL SYSTEMS

(Sheet 1 of 2)

STANDARD 280001-07

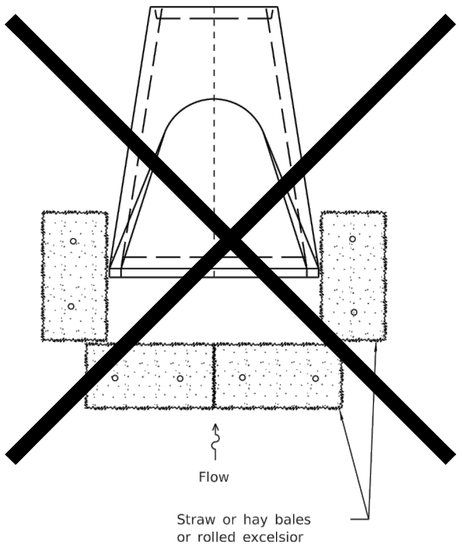

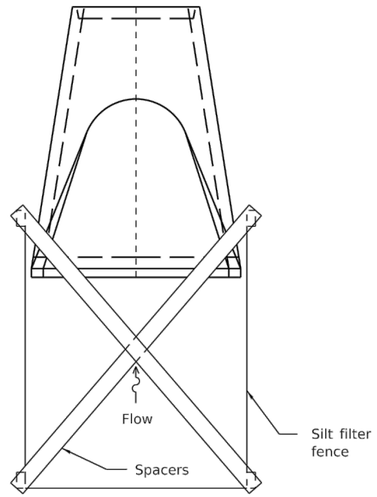

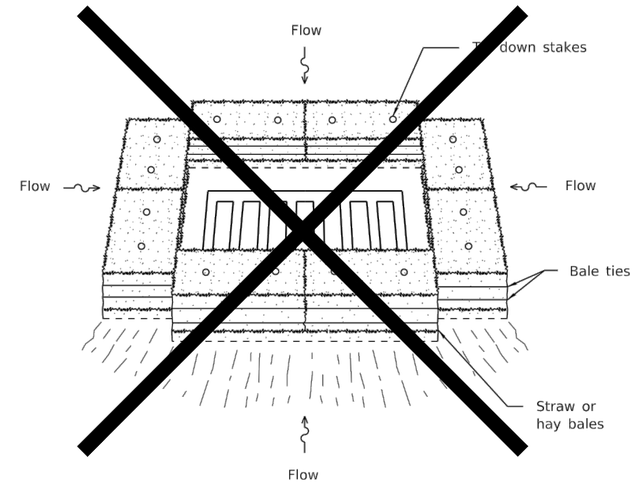

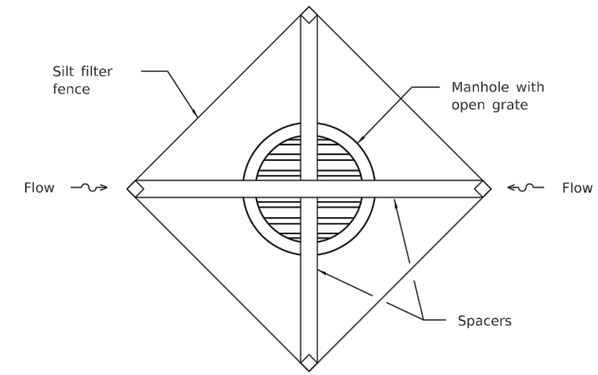

INLET AND PIPE PROTECTION

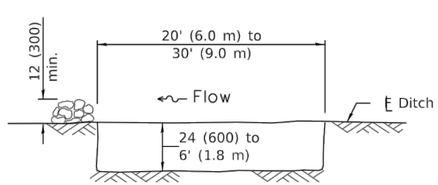

The performance of the basin will improve if put into a series.

ELEVATION

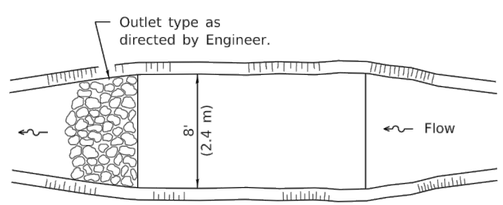

The long dimension should be parallel with the direction of the flow. Accumulated silt shall be removed anytime the basins become 75% filled.

PLAN

SEDIMENT BASIN

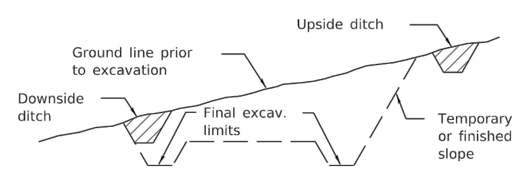

TYPICAL CUT CROSS-SECTION

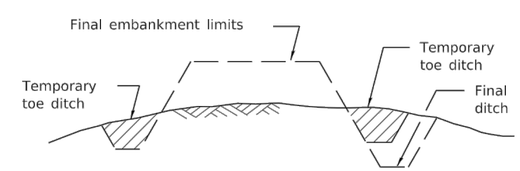

TYPICAL FILL CROSS-SECTION

TEMPORARY DITCHES FOR CUT & FILL SECTIONS

Illinois Department of Transportation

PASSED January 1, 2013
Michael Brand
ENGINEER OF POLICY AND PROCEDURES

APPROVED January 1, 2013
ENGINEER OF DESIGN AND ENVIRONMENT

ISSUED 1-1-97

TEMPORARY EROSION CONTROL SYSTEMS

(Sheet 2 of 2)

STANDARD 280001-07

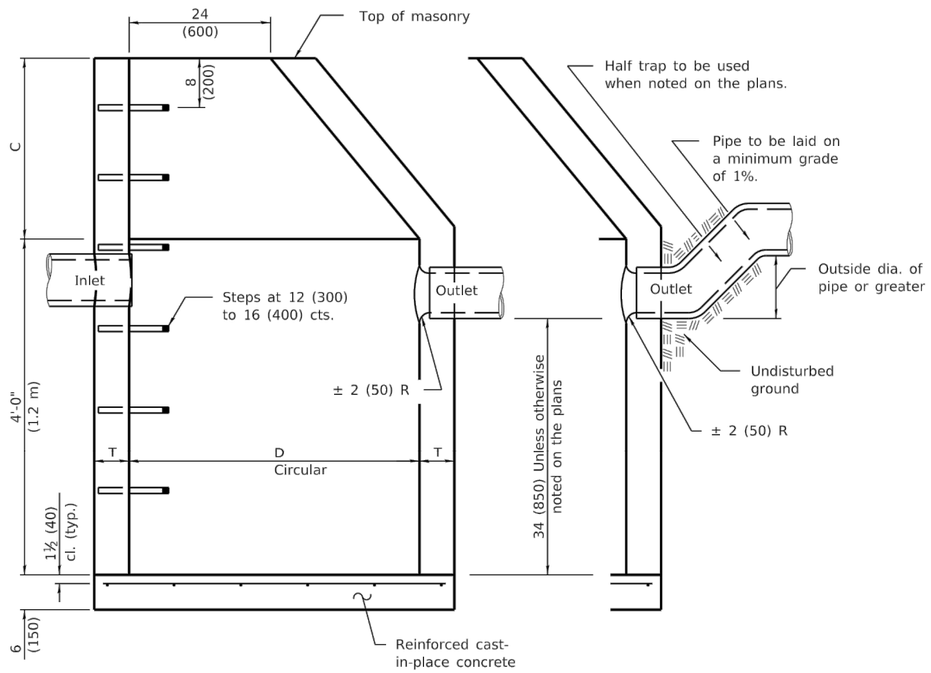

ELEVATION
(Standard Outlet)

ELEVATION
(Half Trap)

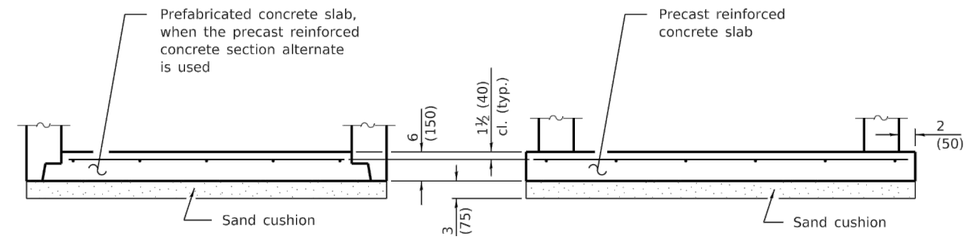

ALTERNATE BOTTOM SLAB

ALTERNATE MATERIALS FOR WALLS	D	C*	T (min.)
[redacted]			
[redacted]			
Precast Reinforced Concrete Section	4'-0'' (1.2 m) 5'-0'' (1.5 m)	30 (750) 3'-9'' (1.15 m)	4 (100) 5 (125)
Cast-in-place Concrete	4'-0'' (1.2 m) 5'-0'' (1.5 m)	30 (750) 3'-9'' (1.15 m)	6 (150) 6 (150)

* For precast reinforced concrete sections, dimension "C" may vary from the dimension given to plus 6 (150).

GENERAL NOTES

Bottom slabs shall be reinforced with a minimum of 0.20 sq. in./ft (420 sq. mm/m) in both directions with a maximum spacing of 12 (300).

Bottom slabs may be connected to the riser as determined by the fabricator; however, only a single row of reinforcement around the perimeter may be utilized.

See Standard 602601 for optional precast reinforced concrete flat slab top.

See Standard 602701 for details of steps.

All dimensions are in inches (millimeters) unless otherwise shown.

Illinois Department of Transportation

PASSED January 1, 2011
Michael Biondi
ENGINEER OF POLICY AND PROCEDURES

APPROVED January 1, 2011
Scott E. Sob
ENGINEER OF DESIGN AND ENVIRONMENT

ISSUED 1-1-97

DATE	REVISIONS
1-1-11	Added 'Outside' to half trap
	note. Detail rein. in slabs.
	Revised general notes.
1-1-09	Switched units to
	English (metric).

CATCH BASIN TYPE A

STANDARD 602001-02

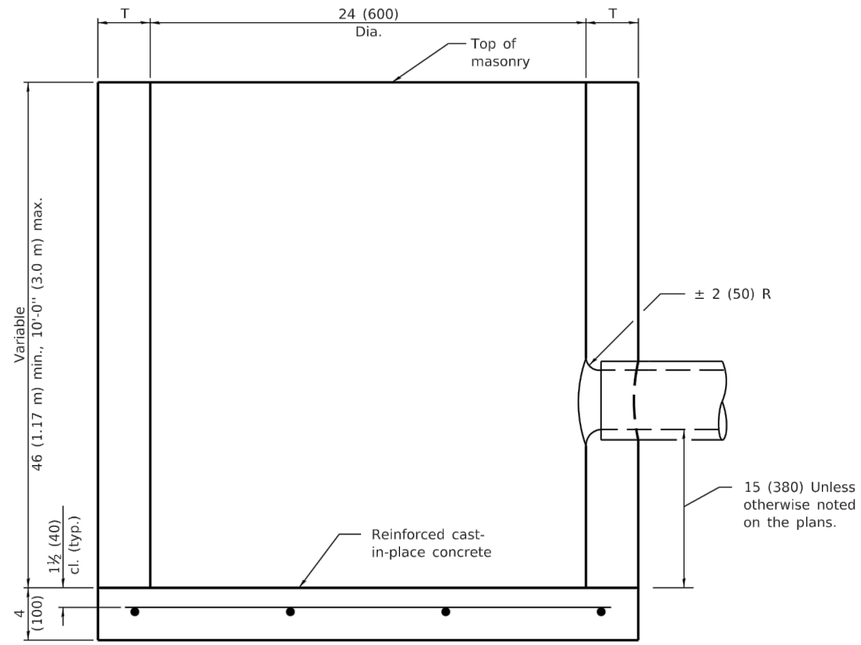

ELEVATION

ALTERNATE MATERIALS FOR WALLS	T (min)
Precast Reinforced Concrete Section	3 (75)
Concrete Masonry Unit	5 (125)
Cast-in-Place Concrete	6 (150)
Brick Masonry	8 (200)

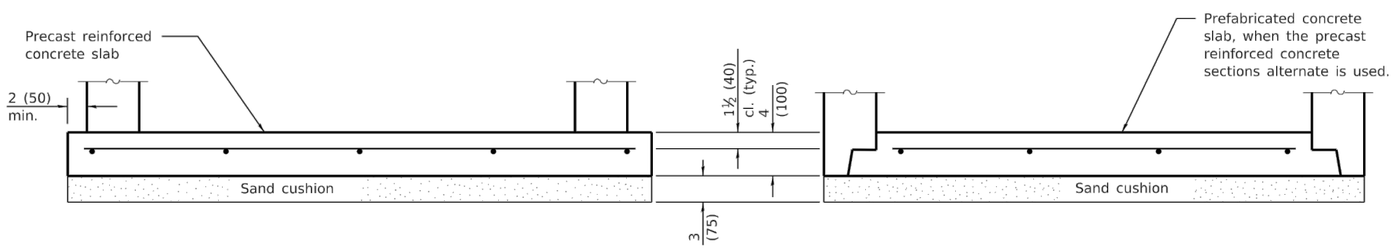

ALTERNATE BOTTOM SLAB

GENERAL NOTES

Bottom slabs shall be reinforced with a minimum of 0.27 sq. in./ft. (570 sq. mm/m) in both directions with a maximum spacing of 9 (230).

Bottom slabs may be connected to the riser as determined by the fabricator; however, only a single row of reinforcement around the perimeter may be utilized.

All dimensions are in inches (millimeters) unless otherwise shown.

Illinois Department of Transportation

PASSED January 1, 2011
ENGINEER OF POLICY AND PROCEDURES
APPROVED January 1, 2011
ENGINEER OF DESIGN AND ENVIRONMENT

ISSUED 1-1-97

DATE	REVISIONS
1-1-11	Detailed rein. in slabs.
	Added max. limit to height.
	Added general notes.
1-1-09	Switched units to
	English (metric).

CATCH BASIN TYPE C

STANDARD 602011-02

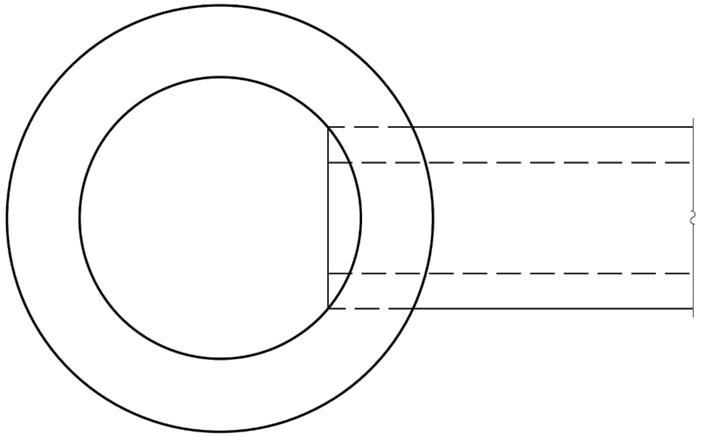

PLAN

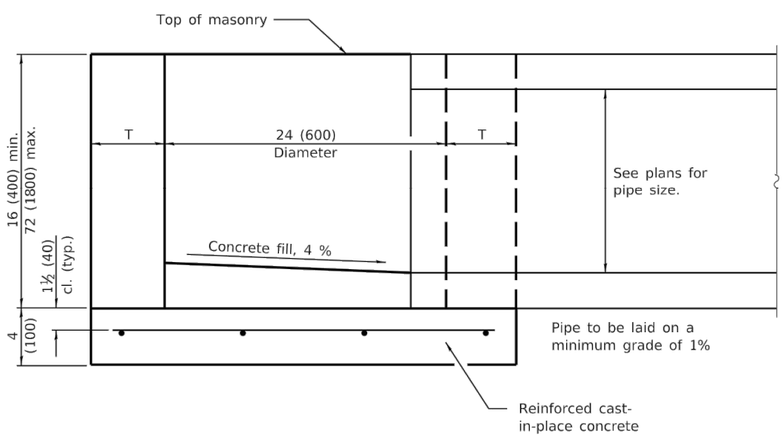

ELEVATION

ALTERNATE MATERIALS FOR WALLS	T
BRICK MASONRY	8 (200)
CAST-IN-PLACE CONCRETE	6 (150)
PRECAST REINFORCED CONCRETE SECTION	3 (75)

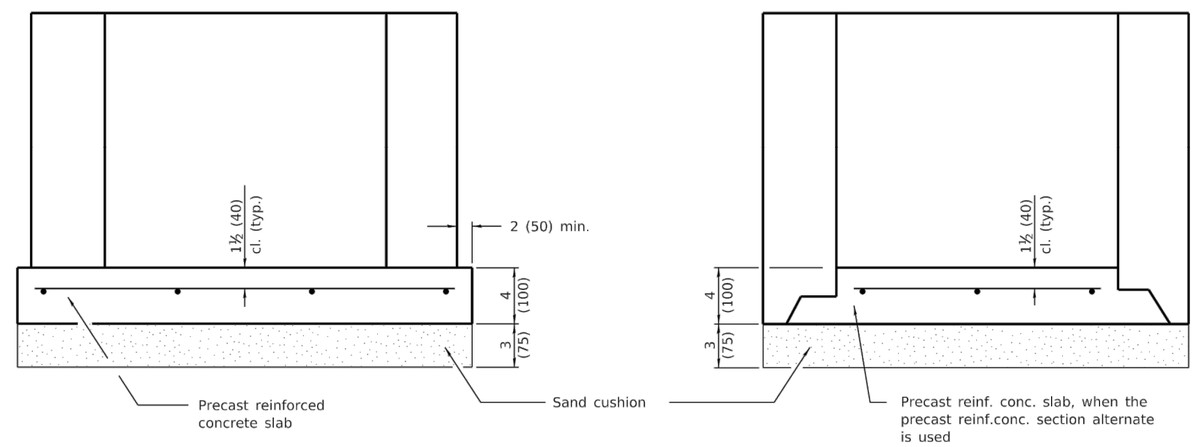

ALTERNATE METHODS

GENERAL NOTES

Bottom slabs shall be reinforced with a minimum of 0.24 sq. in./ft. (510 sq. mm/m) in both directions with a maximum spacing of 10 (250).

Bottom slabs may be connected to the riser as determined by the fabricator; however, only a single row of reinforcement around the perimeter may be utilized.

All dimensions are in inches (millimeters) unless otherwise shown.

Illinois Department of Transportation

PASSED January 1, 2014
Michael Brand
ENGINEER OF POLICY AND PROCEDURES
APPROVED January 1, 2014
ENGINEER OF DESIGN AND ENVIRONMENT

ISSUED 1-1-97

DATE	REVISIONS
1-1-14	Increased height to
	72 (1800) maximum.
1-1-11	Detailed rein. in slabs.
	Added max. limit to height.
	Added general notes.

INLET - TYPE A

STANDARD 602301-04

* For precast reinforced concrete sections, this dimension may vary from the dimension given to plus 6 (150).

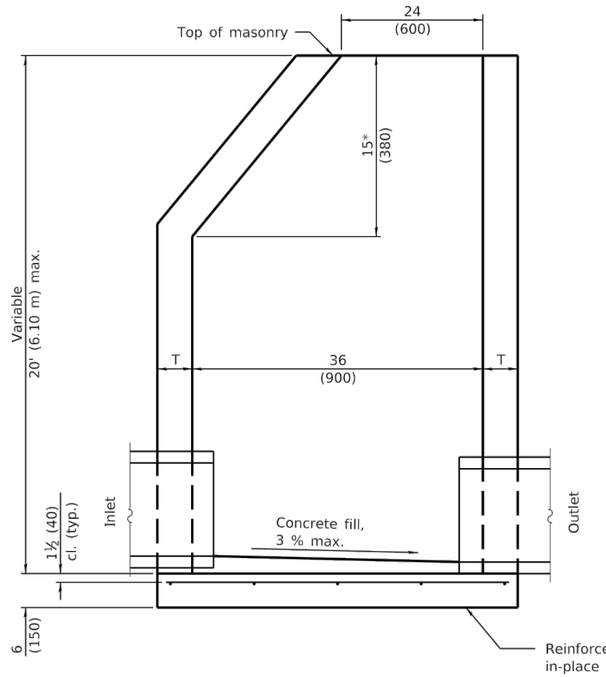

ELEVATION - ECCENTRIC

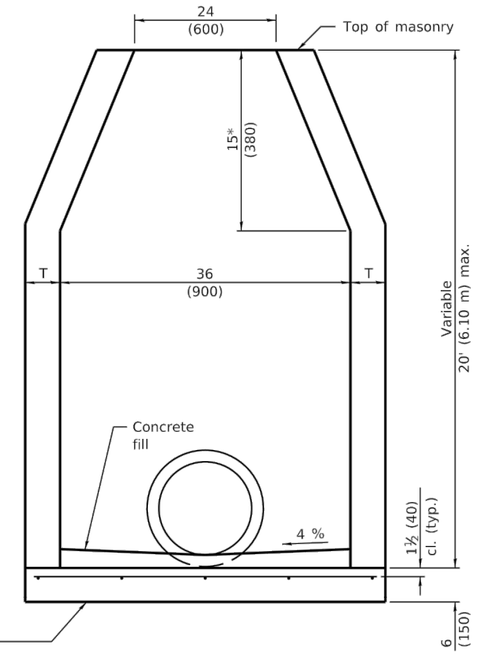

ELEVATION - CONCENTRIC

ALTERNATE MATERIALS FOR WALLS	T (min.)
Concrete Masonry Unit	5 (125)
[redacted]	
Precast Reinforced Concrete Section	3 (75)
Cast-in-Place Concrete	6 (150)

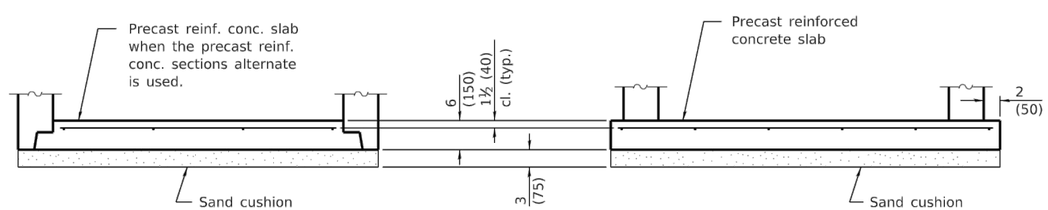

ALTERNATE BOTTOM SLAB

GENERAL NOTES

Bottom slabs shall be reinforced with a minimum of 0.20 sq. in./ft. (420 sq. mm/m) in both directions with a maximum spacing of 12 (300).

Bottom slabs may be connected to the riser as determined by the fabricator; however, only a single row of reinforcement around the perimeter may be utilized.

See Standard 602601 for optional Precast Reinforced Concrete Flat Slab Top.

All dimensions are in inches (millimeters) unless otherwise shown.

Illinois Department of Transportation

PASSED January 1, 2011
Michael Brand
ENGINEER OF POLICY AND PROCEDURES

APPROVED January 1, 2011
ENGINEER OF DESIGN AND ENVIRONMENT

ISSUED 1-1-97

DATE	REVISIONS
1-1-11	Detailed rein. in slabs.
	Added max. limit to height.
	Revised general notes.
1-1-09	Switched units to
	English (metric).

INLET - TYPE B

STANDARD 602306-03

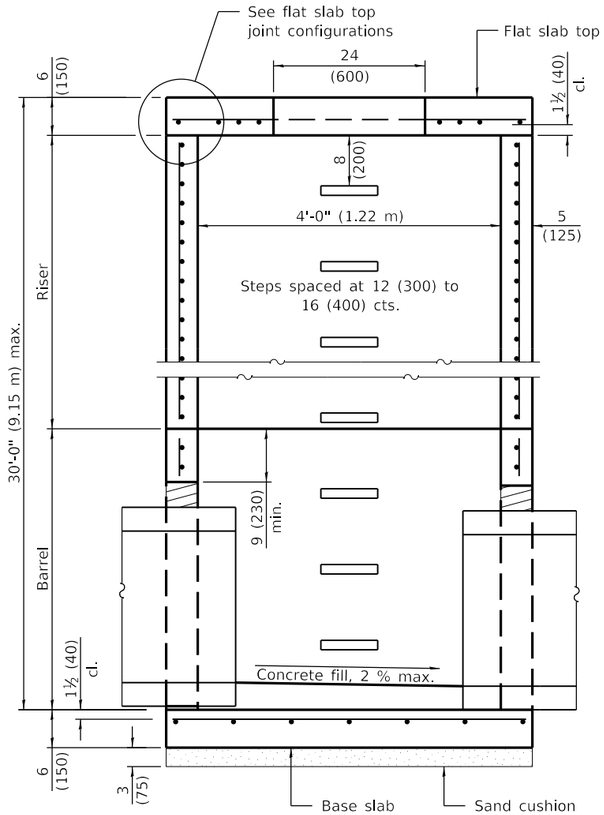

SECTION PARALLEL TO PIPE

(Without conical top riser)

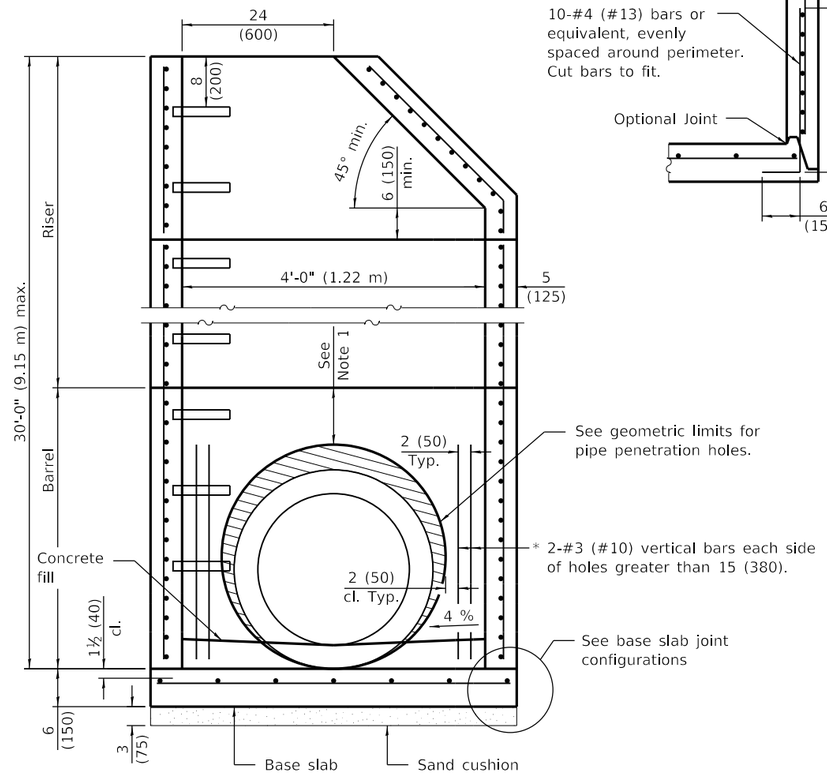

SECTION PERPENDICULAR TO PIPE

(With conical top riser)

* As an alternate, the barrel wall reinforcement may be reduced to riser wall reinforcement with #3 (#10) bars placed around the pipe penetration holes as shown. This option may be utilized when the pipe penetration holes are formed as opposed to cored.

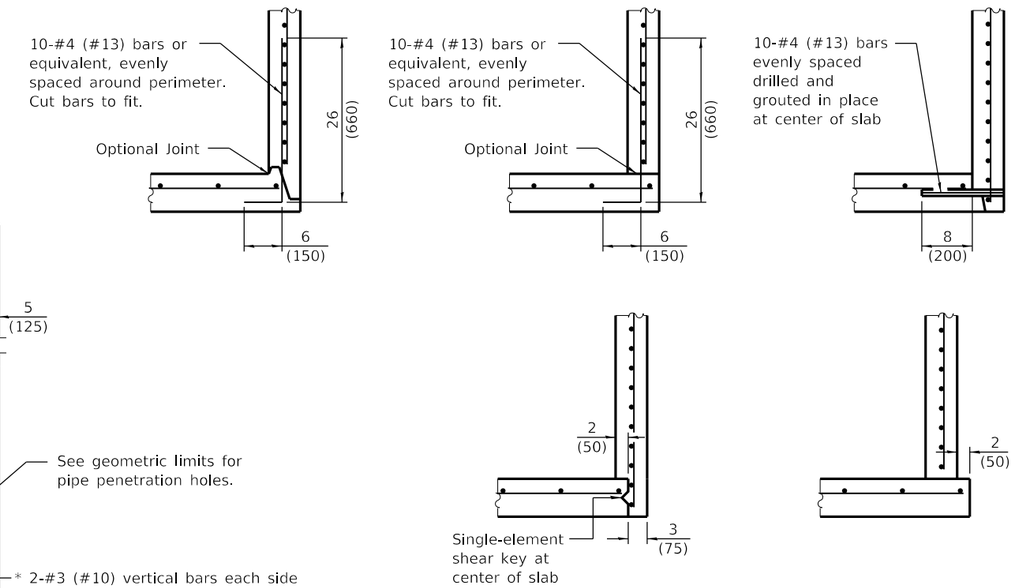

BASE SLAB JOINT CONFIGURATIONS

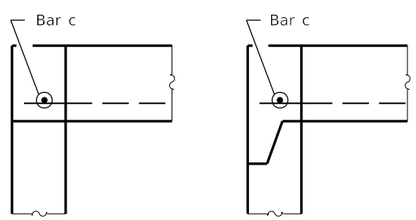

FLAT SLAB TOP JOINT CONFIGURATIONS

(Shown at access hole)

GEOMETRIC LIMITS FOR PIPE PENETRATION HOLES

Note 1: A minimum of 9 (230) of monolithic reinforced concrete shall be maintained above pipe penetration holes > 24 (600).

Note 2: A minimum 12 (300) inside arc length of reinforced concrete shall be maintained between pipe penetration holes > 15 (380).

Note 3: A maximum of 60 percent of the inside perimeter of the reinforced concrete manhole walls may be removed.

Note 4: Horizontal joints that intersect pipe penetration holes > 15 (380) shall have one joint splice for every location around the perimeter of the joint where the inside arc length between pipe penetration holes is < 24 (600). See joint splice detail.

Note 5: The recommended pipe penetration hole is equal to the O.D. of the pipe plus 4 (100).

Note 6: Only pipe penetration holes ≤ 15 (380) are allowed in riser sections.

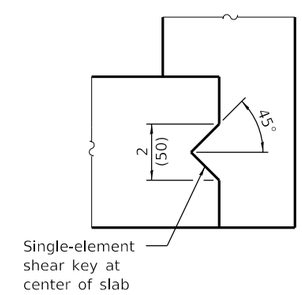

SHEAR KEY GEOMETRY

(Reinforcement not shown for clarity)

GENERAL NOTES

The manufacturer shall ensure that all precast manhole sections are additionally reinforced where required to resist damage from handling, shipping and installation stresses.

Lifting holes shall be located in the sections as per the manufacturer's recommendations.

See Standard 602701 for details of manhole steps.

All dimensions are in inches (millimeters) unless otherwise noted.

Illinois Department of Transportation

PASSED January 1, 2021
ENGINEER OF POLICY AND PROCEDURES

APPROVED January 1, 2021
ENGINEER OF DESIGN AND ENVIRONMENT

ISSUED 1-1-97

DATE	REVISIONS
1-1-21	Revised Note 1 and lifting hole
	general note.
3-1-19	Moved wall reinforcement from
	inside face to middle.

PRECAST MANHOLE TYPE A 4' (1.22 m) DIAMETER

(Sheet 1 of 2)

STANDARD 602401-07

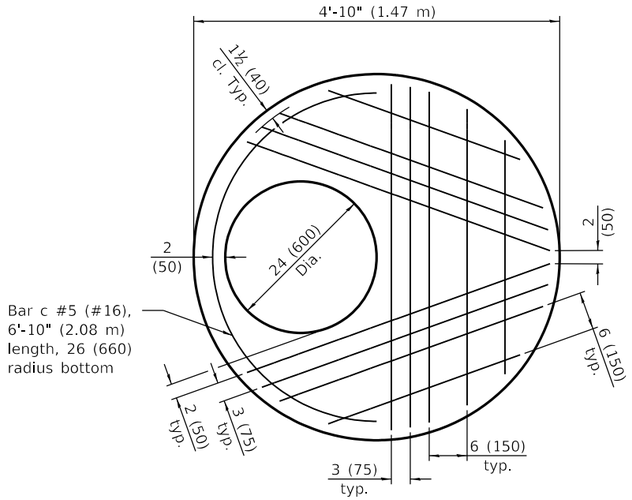

PLAN - FLAT SLAB TOP

(Showing layout of reinforcement bars and c bars)

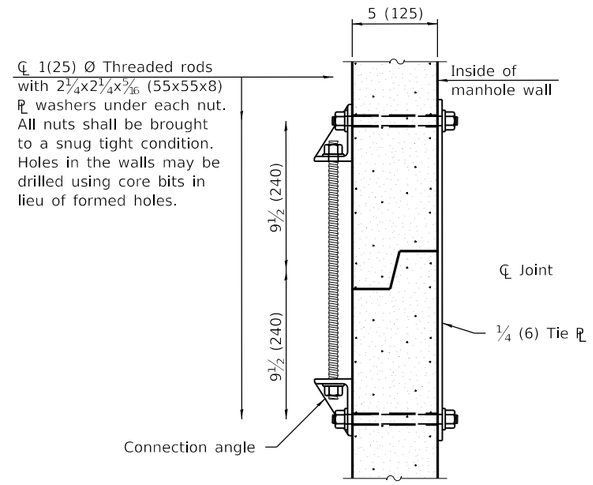

JOINT SPLICE

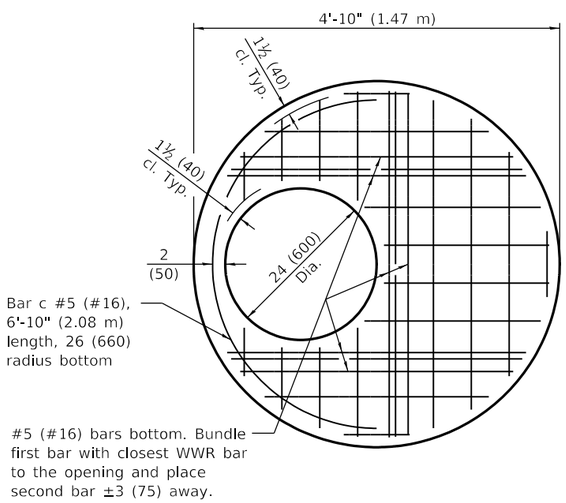

PLAN - FLAT SLAB TOP

(Showing layout of welded wire reinforcement and c bars)

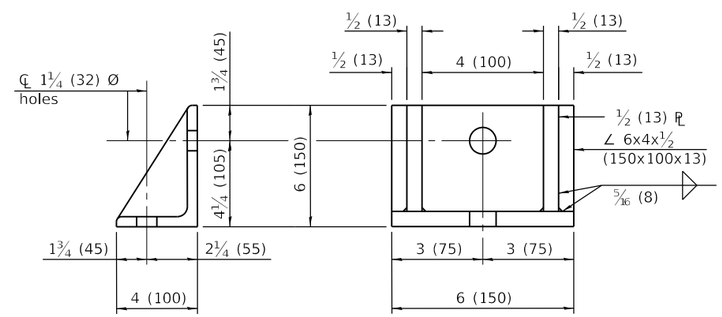

CONNECTION ANGLE

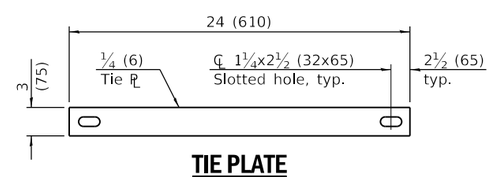

TIE PLATE

FLAT SLAB TOP REINFORCEMENT

Location	WWR (each direction)		Rebar		
	A_s (min.)	Spacing (max.)	A_s (min.)	Spacing (max.)	Bar Size
Bottom Mat	** 0.62 sq. in./ft. (1312 sq. mm/m)	6 (150)	See plan view for rebar orientation and spacing and this table for bar size		#5 (#16)

** Only one layer of WWR permitted to avoid congestion.

WALL REINFORCEMENT

Location	Orientation	WWR or Rebar	
		A_s (min.)	Spacing (max.)
Riser	Circumferential	0.12 sq. in./ft. (254 sq. mm/m)	6 (150)
	Vertical	0.045 sq. in./ft. (95 sq. mm/m)	8 (200)
Barrel	Circumferential	0.12 sq. in./ft. (254 sq. mm/m)	6 (150)
	Vertical	0.16 sq. in./ft. (339 sq. mm/m)	4 (100)

BASE SLAB REINFORCEMENT

Location	Total Height	WWR or Rebar (each direction)	
		A_s (min.)	Spacing (max.)
Top Mat	≤ 20 ft. (6.10 m)	0.24 sq. in./ft. (508 sq. mm/m)	10 (250)
	> 20 ft. (6.10 m)	0.24 sq. in./ft. (508 sq. mm/m)	10 (250)

Illinois Department of Transportation

PASSED January 1, 2021
ENGINEER OF POLICY AND PROCEDURES

APPROVED January 1, 2021
ENGINEER OF DESIGN AND ENVIRONMENT

ISSUED 1-1-97

PRECAST MANHOLE TYPE A 4' (1.22 m) DIAMETER

(Sheet 2 of 2)

STANDARD 602401-07

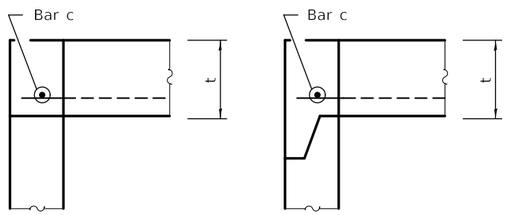

FLAT SLAB TOP JOINT CONFIGURATIONS
FOR D = 36 (900) AND D = 4'-0" (1.22 m)
(Shown at access hole)

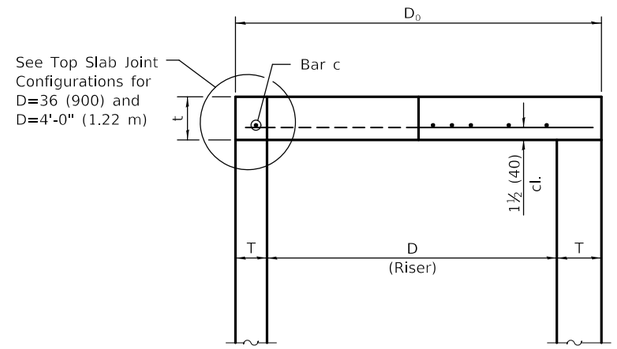

SECTION THRU FLAT SLAB TOP
FOR D = 36 (900) AND D = 4'-0" (1.22 m)

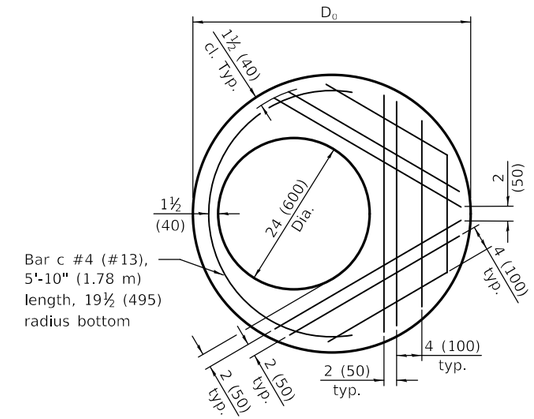

PLAN - FLAT SLAB TOP FOR D = 36 (900)
(Showing layout of reinforcement bars and c bars)

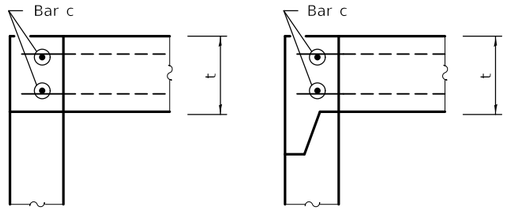

FLAT SLAB TOP JOINT CONFIGURATIONS
D = 5'-0" (1.52 m)
(Shown at access hole)

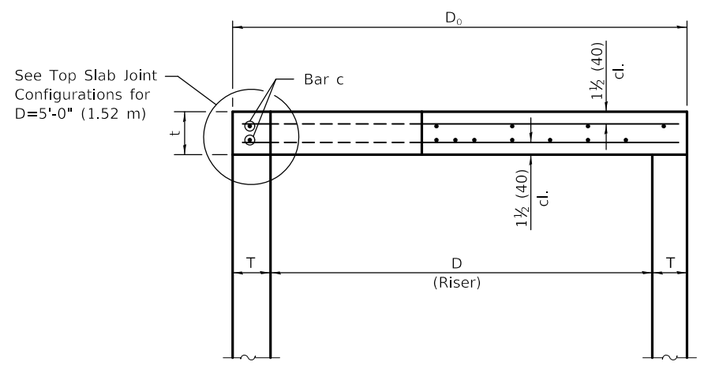

SECTION THRU FLAT SLAB TOP
FOR D = 5'-0" (1.52 m)

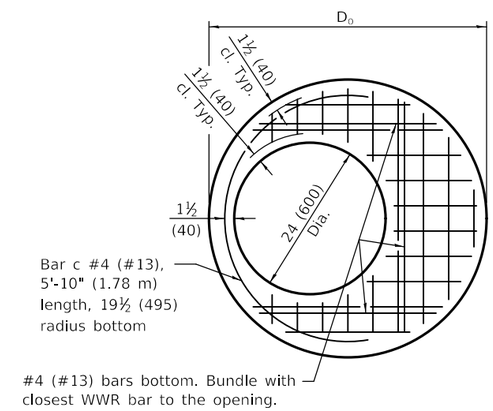

PLAN - FLAT SLAB TOP FOR D = 36 (900)
(Showing layout of welded wire reinforcement and c bars)

TABLE

D	T	D_0 (min.)	t
36 (900)	See applicable Standards	D + 2T	6 (150)
4'-0" (1.2 m)			6 (150)
5'-0" (1.5 m)			8 (200)

GENERAL NOTES

The flat slab top may be used in lieu of the tapered tops shown on Standards 602001, 602016, or 602306 at the option of the Contractor or when field conditions prohibit the use of tapered tops.

Lifting holes shall be located in the sections as per the manufacturer's recommendations.

All dimensions are in inches (millimeters) unless otherwise shown.

Illinois Department of Transportation

PASSED January 1, 2019
ENGINEER OF POLICY AND PROCEDURES

APPROVED January 1, 2019
ENGINEER OF DESIGN AND ENVIRONMENT

ISSUED 1-1-97

DATE	REVISIONS
1-1-19	Expanded / refined reinforcement
	options.
1-1-18	Revised for compliance with
	LRFD.

PRECAST REINFORCED CONCRETE FLAT SLAB TOP

(Sheet 1 of 2)

STANDARD 602601-06

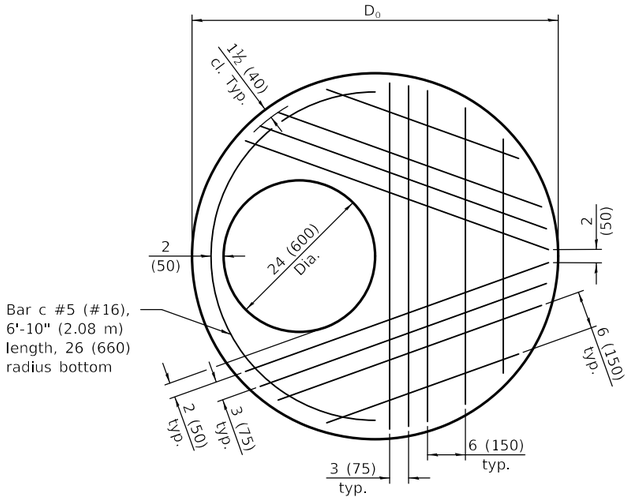

PLAN - FLAT SLAB TOP FOR D = 4'-0" (1.22 m)

(Showing layout of reinforcement bars and c bars)

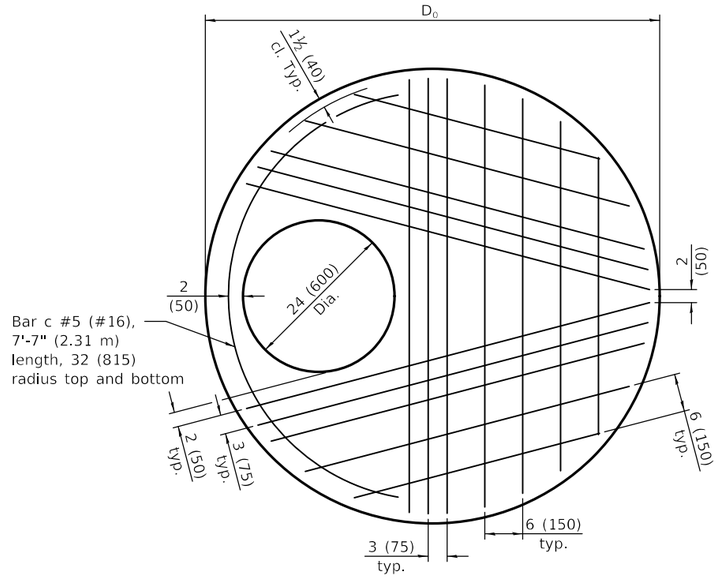

PLAN - FLAT SLAB TOP FOR D = 5'-0" (1.52 m)

(Showing layout of bottom reinforcement bars and c bars)

FLAT SLAB TOP REINFORCEMENT FOR D = 36 (900)

Location	WWR (each direction)		Rebar		
	A_s (min.)	Spacing (max.)	A_s (min.)	Spacing (max.)	Bar Size
Bottom Mat	* 0.60 sq. in./ft. (1270 sq. mm/m)	6 (150)	See plan view for rebar orientation and spacing and this table for bar size		#4 (#13)

FLAT SLAB TOP REINFORCEMENT FOR D = 4'-0" (1.22 m)

Location	WWR (each direction)		Rebar		
	A_s (min.)	Spacing (max.)	A_s (min.)	Spacing (max.)	Bar Size
Bottom Mat	* 0.62 sq. in./ft. (1312 sq. mm/m)	6 (150)	See plan view for rebar orientation and spacing and this table for bar size		#5 (#16)

FLAT SLAB TOP REINFORCEMENT FOR D = 5'-0" (1.52 m)

Location	WWR (each direction)		Rebar (each direction except as noted)		
	A_s (min.)	Spacing (max.)	A_s (min.)	Spacing (max.)	Bar Size
Top Mat	0.11 sq. in./ft. (233 sq. mm/m)	18 (450)	0.11 sq. in./ft. (233 sq. mm/m)	18 (450)	#3 or #4 (#10) (#13)
Bottom Mat	* 0.40 sq. in./ft. (847 sq. mm/m)	6 (150)	See plan view for rebar orientation and spacing and this table for bar size		#4 (#13)

* Only one layer of WWR permitted to avoid congestion.

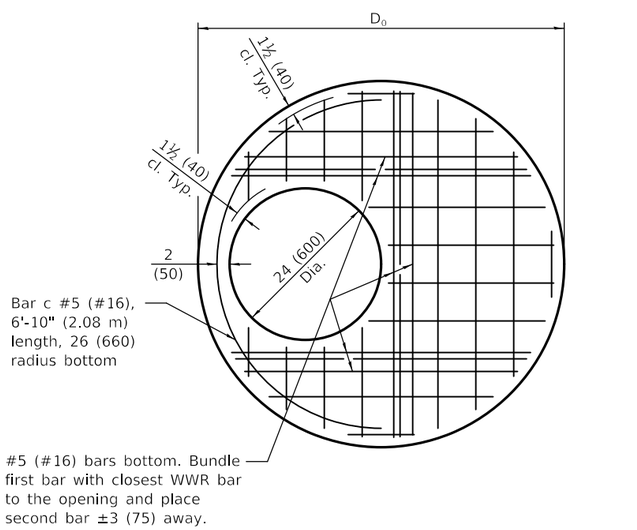

PLAN - FLAT SLAB TOP FOR D = 4'-0" (1.22 m)

(Showing layout of welded wire reinforcement and c bars)

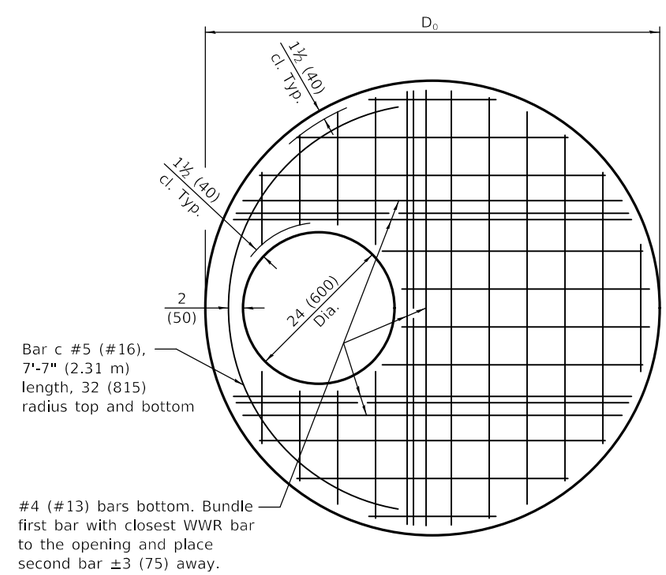

PLAN - FLAT SLAB TOP FOR D = 5'-0" (1.52 m)

(Showing layout of welded wire reinforcement and c bars)

Illinois Department of Transportation

PASSED January 1, 2019
ENGINEER OF POLICY AND PROCEDURES

APPROVED January 1, 2019
ENGINEER OF DESIGN AND ENVIRONMENT

ISSUED 1-1-97

PRECAST REINFORCED CONCRETE FLAT SLAB TOP

(Sheet 2 of 2)

STANDARD 602601-06

CAST IRON STEPS

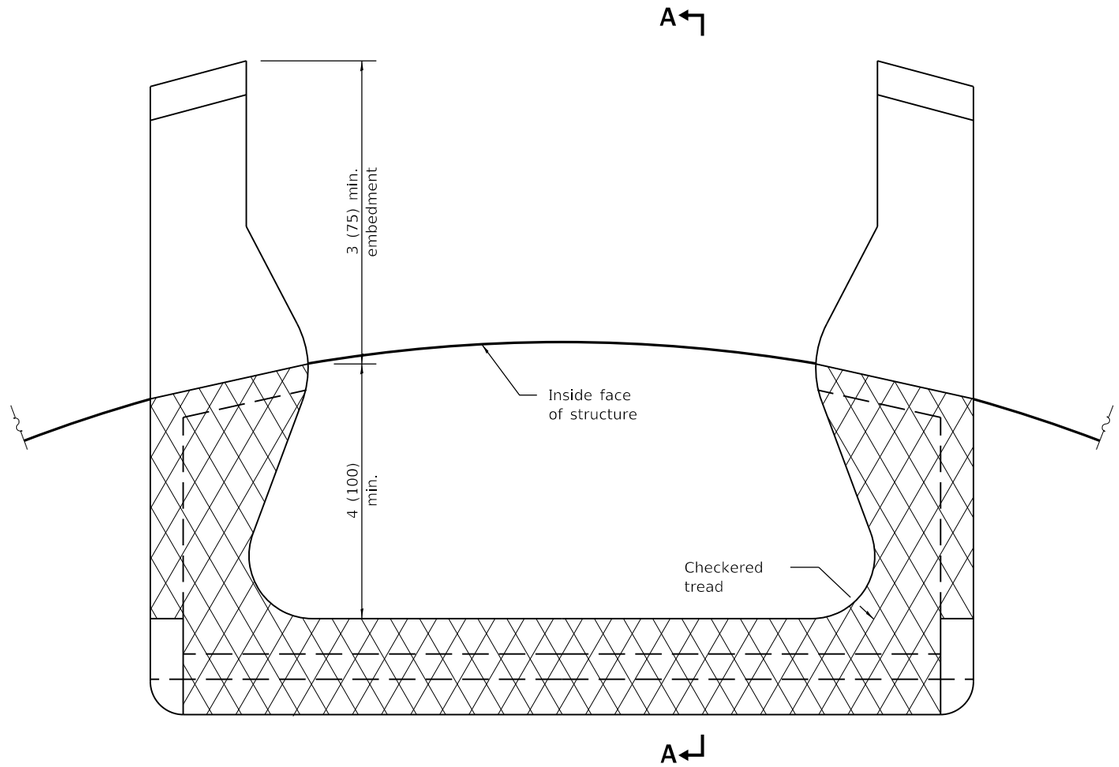

PLAN VIEW

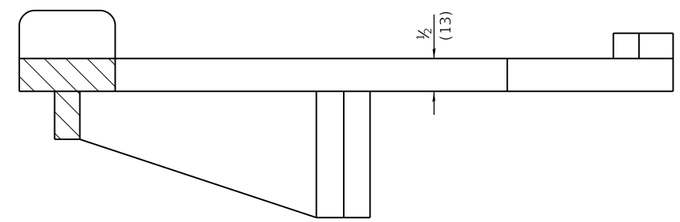

SECTION A-A

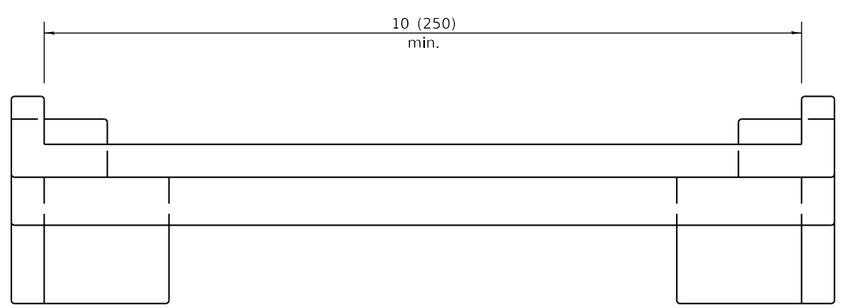

ELEVATION VIEW

All dimensions are in inches (millimeters)
unless otherwise shown.

DATE	REVISIONS
1-1-09	Switched units to
	English (metric).
4-1-06	Revised title, drawings,
	and added plastic
	steps on sheet 2.

MANHOLE STEPS

(Sheet 1 of 2)

STANDARD 602701-02

Illinois Department of Transportation

PASSED January 1, 2009
ENGINEER OF POLICY AND PROCEDURES

APPROVED January 1, 2009
ENGINEER OF DESIGN AND ENVIRONMENT

ISSUED 1-1-97

PLASTIC STEPS

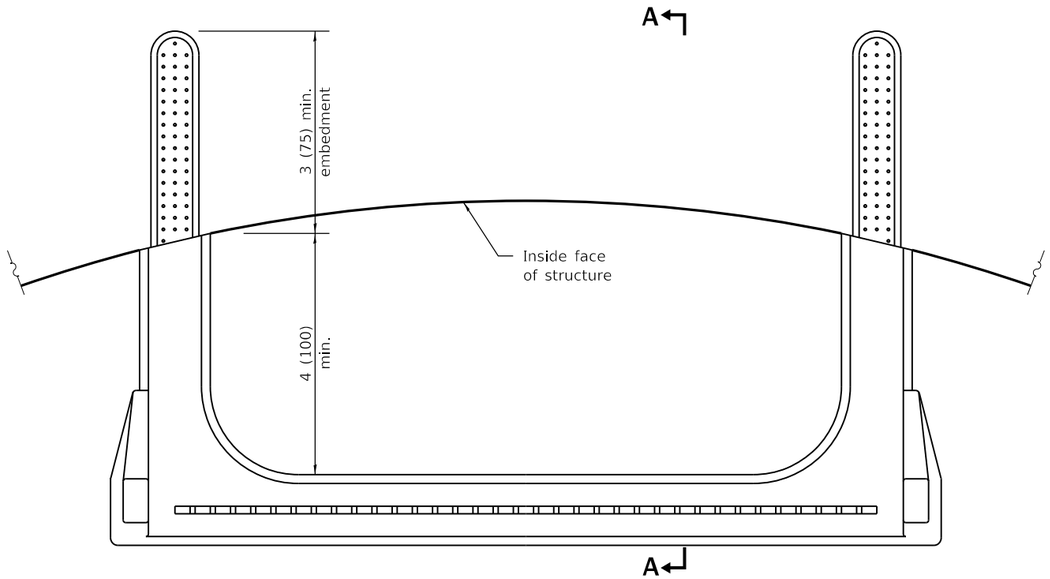

PLAN VIEW

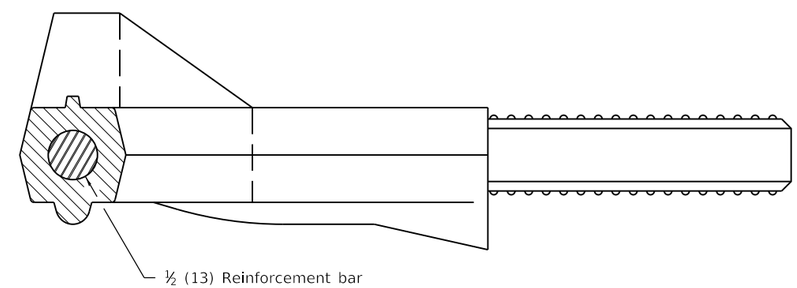

SECTION A-A

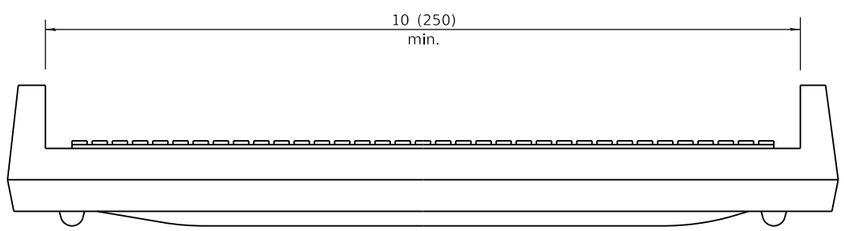

ELEVATION VIEW

Illinois Department of Transportation

PASSED January 1, 2009

ENGINEER OF POLICY AND PROCEDURES

APPROVED January 1, 2009

ENGINEER OF DESIGN AND ENVIRONMENT

ISSUED 1-1-97

MANHOLE STEPS

(Sheet 2 of 2)

STANDARD 602701-02

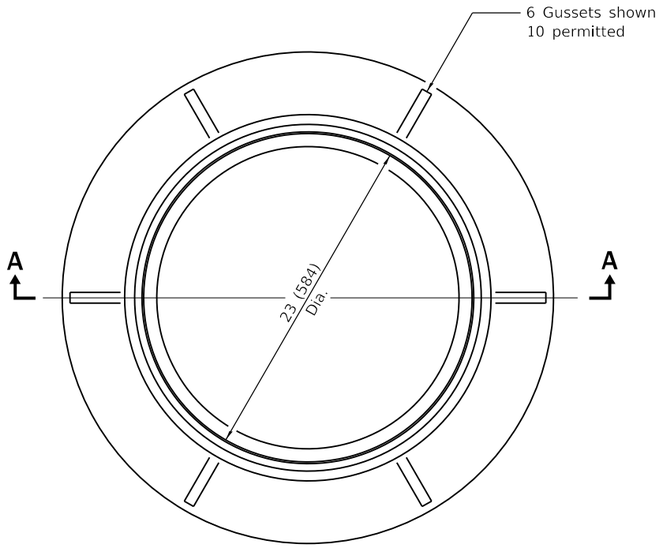

CAST FRAME

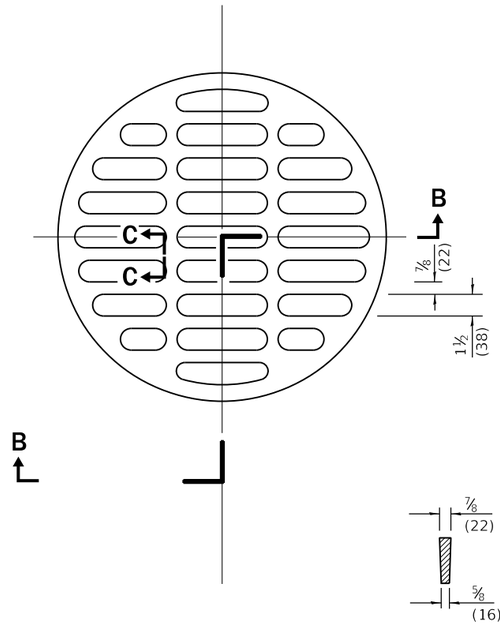

SECTION C-C

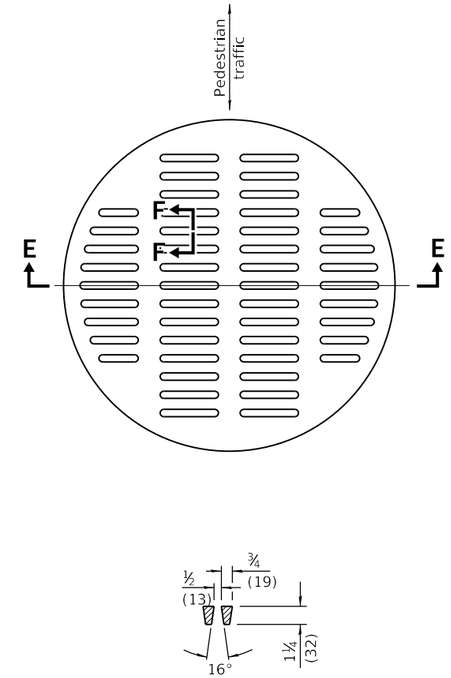

SECTION F-F

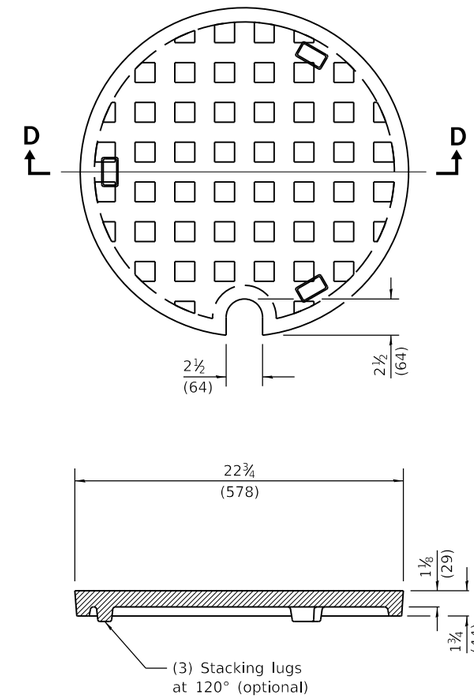

SECTION D-D

CAST CLOSED LID

Gray Iron Lid

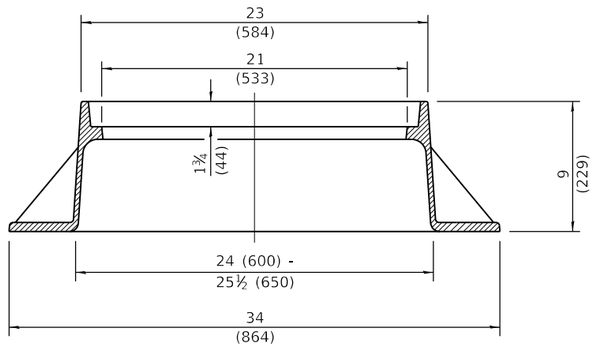

SECTION A-A

Gray Iron

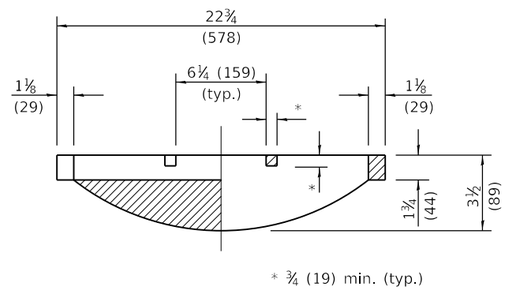

SECTION B-B

CAST OPEN LID

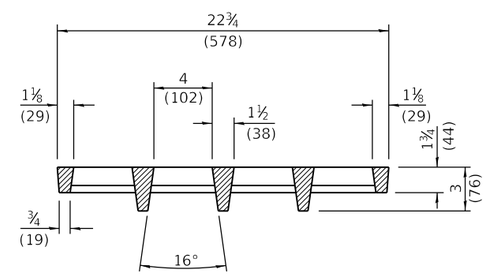

SECTION E-E

ADA COMPLIANT
CAST OPEN LID

All dimensions are in inches (millimeters) unless otherwise shown.

Illinois Department of Transportation

PASSED January 1, 2020
ENGINEER OF POLICY AND PROCEDURES

APPROVED January 1, 2020
ENGINEER OF DESIGN AND ENVIRONMENT

ISSUED 1-1-97

DATE	REVISIONS
1-1-20	Revised dimension in Section B-B
	of cast open lid.
1-1-15	Revised dimensioning of
	frame. Added ADA compliant
	open lid.
1-1-09	Switched units to English (metric).

FRAME AND LIDS TYPE 1

STANDARD 604001-05

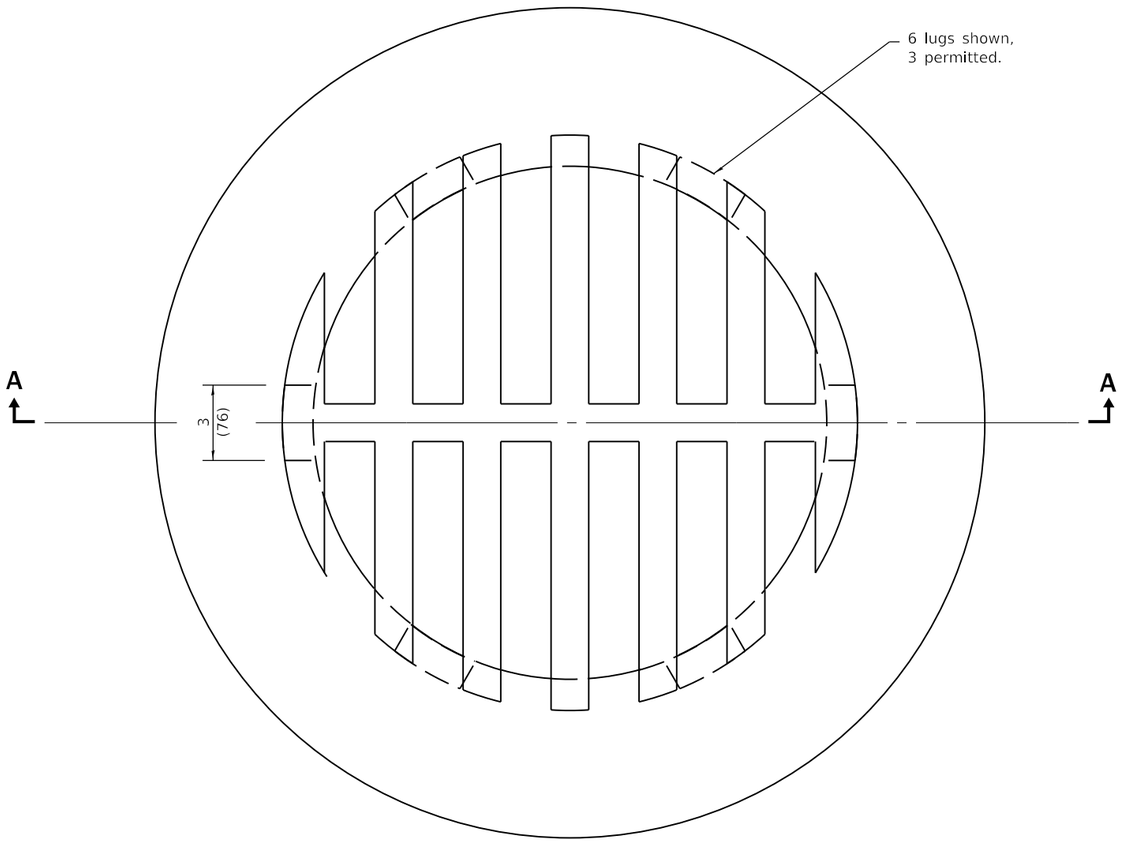

CAST GRATE

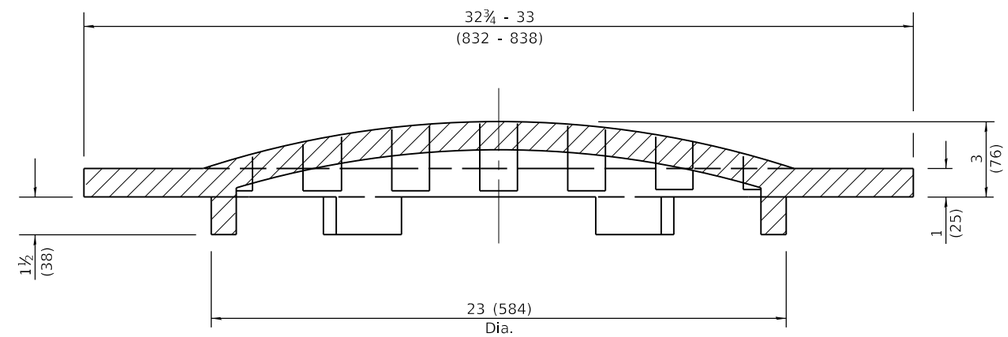

SECTION A-A

All dimensions are in inches (millimeters)
unless otherwise shown.

Illinois Department of Transportation

PASSED January 1, 2015
Michael Brand
ENGINEER OF POLICY AND PROCEDURES

APPROVED January 1, 2015
ENGINEER OF DESIGN AND ENVIRONMENT

ISSUED 1-1-97

DATE	REVISIONS
1-1-15	Revised dimensions.
1-1-09	Switched units to
	English (metric).

GRATE TYPE 8

STANDARD 604036-03

TYPICAL WATERMAIN CONNECTION
MAY BE USED FOR "T" OR "CROSS" SECTION

PROFILE VIEW

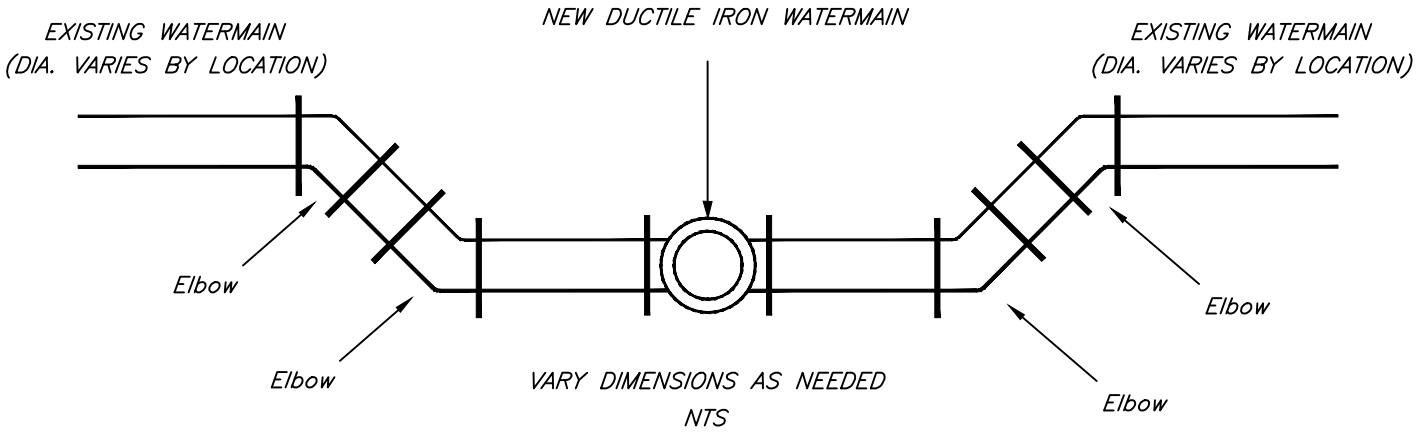

ALL FITTINGS TO HAVE MEGALUG GLANDS AND ALL BOLTS & NUTS TO BE STAINLESS STEEL 304 BOLTS & T-BOLTS NUTS 316 NUTS.

ALL BENDS AND ELBOWS ARE TO BE THRUST BLOCKED, PER VILLAGE STANDARD WTR-05.

ALL ELBOWS SHALL BE 45 DEGREE ANGLES.

ALL NEW DUCTILE IRON WATER MAINS SHALL BE ENCASED IN A POLYETHELENE TUBE ACCORDING TO ANSI/AWWA C105/A21.5-93. METHOD A SHALL BE UTILIZED IN PLACING ENCASEMENT MATERIAL. HIGH-DENSITY, CROSS-LAMINATED POLYETHELENE FILM CONFORMING TO ASTM D1248-89 SHALL BE USED.

N.T.S.	DATE	REVISIONS	DRAWN BY	APPVD BY	STANDARD DETAIL
Village of DOWNERS GROVE FOUNDED IN 1832	02/20/07		W.J.M.	M.D.M.	WATERMAIN CONNECTION
	03/25/11		S.A.V.	A.J.S.	
	03/01/15		A.J.S.	A.J.S.	
	01/01/17		N.R.H.	J.M.W.	
	01/01/18		N.R.H.	J.M.W.	
	DRAWING NO. WTR-01				
	I:\LIBRARY\DETAILS\WATER\WTR-01				

HORIZONTAL SEPARATION

PROPOSED SEWER (OR WATER) IS LOCATED 10 FEET OR MORE FROM EXISTING WATER (SEWER)

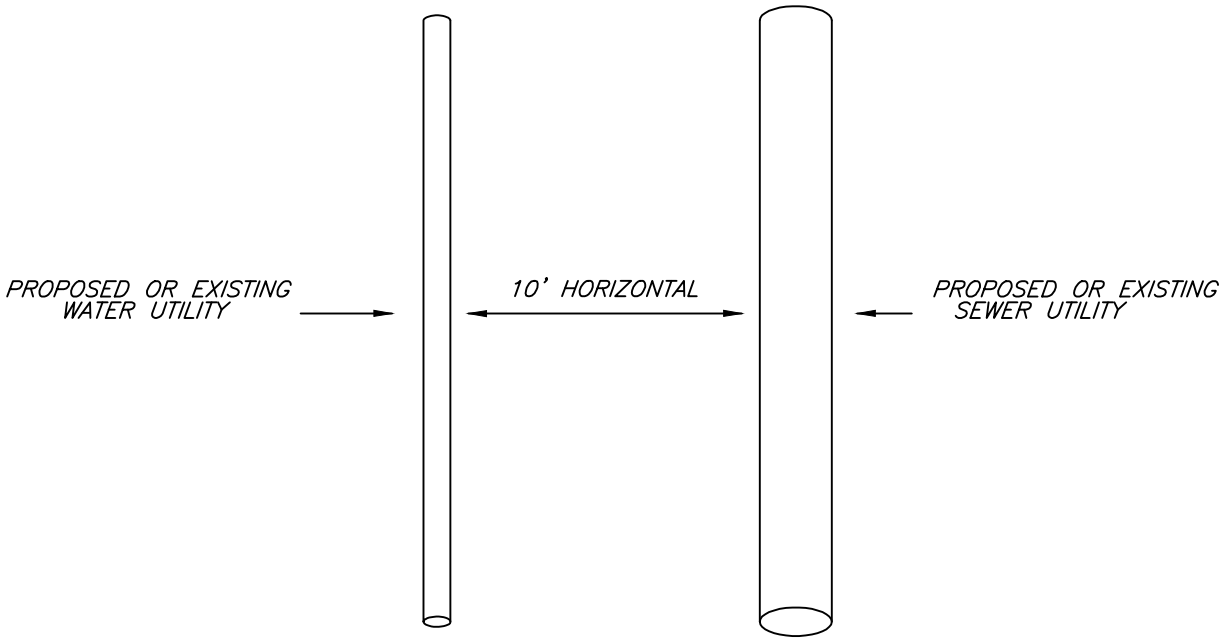

PLAN VIEW

VERTICAL/SHELVED SEPARATION

PROPOSED SEWER (OR WATER) IS LOCATED LESS THAN 10 FEET FROM EXISTING WATER (OR SEWER)

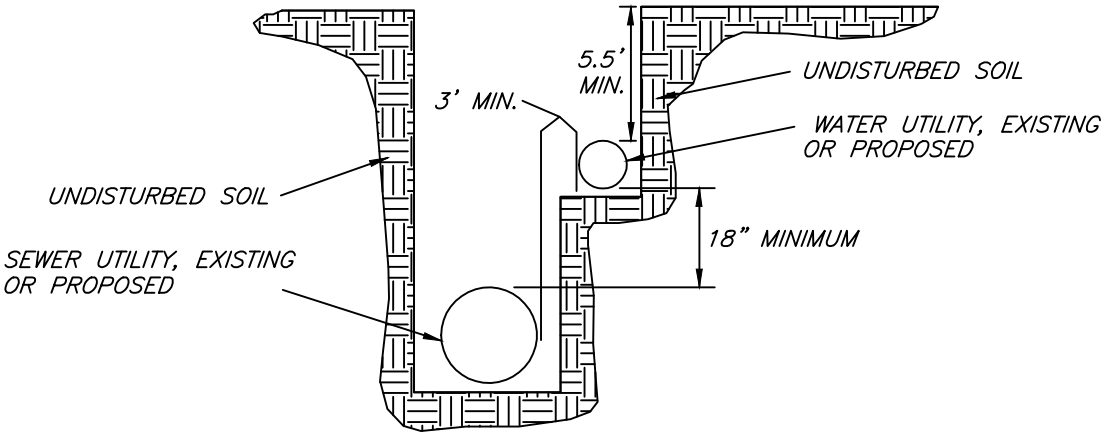

N.T.S.	DATE	REVISIONS	DRAWN BY	APPVD BY	STANDARD DETAIL
Village of DOWNERS GROVE FOUNDED IN 1832	02/20/07		W.J.M.	M.D.M.	WATER AND SEWER SEPARATION REQUIREMENTS HORIZONTAL SEPARATION
	03/25/11		S.A.V.	A.J.S.	
	03/01/15		S.A.V.	A.J.S.	
	01/01/17		N.R.H.	J.M.W.	
	01/01/18		N.R.H.	J.M.W.	
	DRAWING NO. WTR-02				
	I:\LIBRARY\DETAILS\WATER\WTR-02				

VERTICAL SEPARATION

ABOVE

PROPOSED WATER MAIN ABOVE EXISTING SEWER LINE WITH 18" MINIMUM SEPARATION

NOTE: CLASS 5 MATERIAL SHALL BE COMPACTED TO 95% OF STANDARD PROCTOR MAXIMUM DENSITY

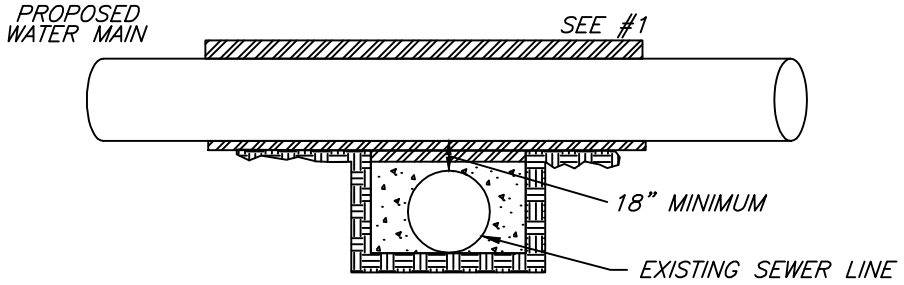

GUIDELINES

1. OMIT SELECT GRANULAR CRADLE AND GRANULAR BACKFILL TO ONE (1) FOOT OVER TOP OF PIPE AND USE SELECT EXCAVATED MATERIAL (CLASS 5) AND COMPACT FOR 10 FEET ON EITHER SIDE OF SEWER LINE
2. IF SELECT GRANULAR MATERIAL EXISTS, REMOVE WITHIN WIDTH OF EXISTING SEWER LINE TRENCH AND REPLACE WITH SELECT EXCAVATED MATERIAL (CLASS 5) AND COMPACT

PROPOSED WATER MAIN ABOVE EXISTING SEWER LINE WITH LESS THAN 18" MINIMUM SEPARATION

NOTE: CLASS 5 MATERIAL SHALL BE COMPACTED TO 95% OF STANDARD PROCTOR MAXIMUM DENSITY

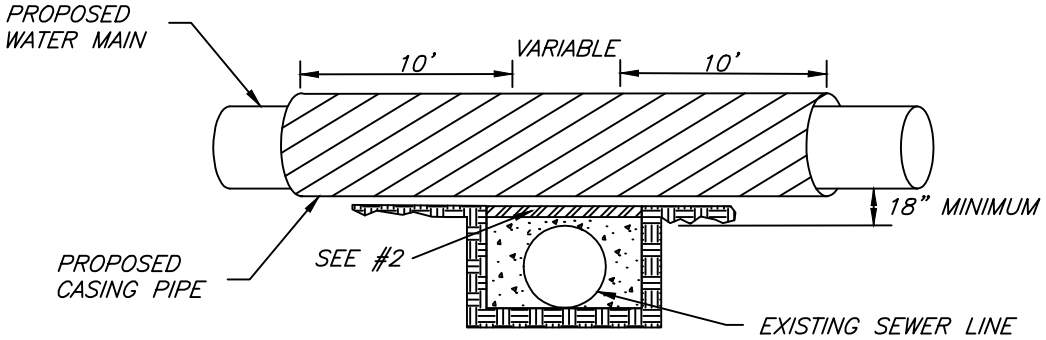

1. OMIT SELECT GRANULAR CRADLE AND GRANULAR BACKFILL TO ONE (1) FOOT OVER TOP OF PIPE AND USE SELECT EXCAVATED MATERIAL (CLASS 5) AND COMPACT FOR 10 FEET ON EITHER SIDE OF SEWER LINE
2. IF SELECT GRANULAR MATERIAL EXISTS, REMOVE WITHIN WIDTH OF EXISTING SEWER LINE TRENCH AND REPLACE WITH SELECT EXCAVATED MATERIAL (CLASS 5) AND COMPACT
3. USE A CASING FOR PROPOSED WATER MAIN AND SEAL BOTH ENDS OF CASING PIPE. SEE DETAIL WTR-07 FOR CASING AND SPACER INFORMATION
4. POINT LOADS SHALL NOT BE ALLOWED BETWEEN WATER MAIN OR WATER MAIN CASING PIPE OR SEWER LINE

N.T.S.	DATE	REVISIONS	DRAWN BY	APPVD BY	STANDARD DETAIL
Village of DOWNERS GROVE FOUNDED IN 1832	02/20/07		W.J.M.	M.D.M.	WATER AND SEWER SEPARATION REQUIREMENTS VERTICAL SEPARATION ABOVE
	03/25/11		S.A.V.	A.J.S.	
	03/01/15		A.J.S.	A.J.S.	
	01/01/17		N.R.H.	J.M.W.	
	01/01/18		N.R.H.	J.M.W.	
	DRAWING NO. WTR-03				
	I:\LIBRARY\DETAILS\WATER\WTR-03				

VERTICAL SEPARATION

PROPOSED WATER MAIN BELOW EXISTING SEWER LINE WITH 18" MINIMUM SEPARATION

NOTE: CLASS 5 MATERIAL SHALL BE COMPACTED TO 95% OF STSANDARD PROCTOR MAXIMUM DENSITY

1. OMIT SELECT GRANULAR CRADLE AND GRANULAR BACKFILL TO ONE (1) FOOT OVER TOP OF PIPE AND USE SELECT EXCAVATED MATERIAL (CLASS 5) AND COMPACT FOR 10 FEET ON EITHER SIDE OF SEWER LINE
2. IF SELECT GRANULAR MATERIAL EXISTS, REMOVE WITHIN WIDTH OF EXISTING SEWER LINE TRENCH AND REPLACE WITH SELECT EXCAVATED MATERIAL (CLASS 5) AND COMPACT
3. USE A CASING FOR PROPOSED WATER MAIN AND SEAL BOTH ENDS OF CASING PIPE. SEE DETAIL WTR-07 FOR CASING AND SPACER INFORMATION
4. PROVIDE ADEQUATE SUPPORT FOR EXISTING SEWER LINE TO PREVENT DAMAGE DUE TO SETTLEMENT

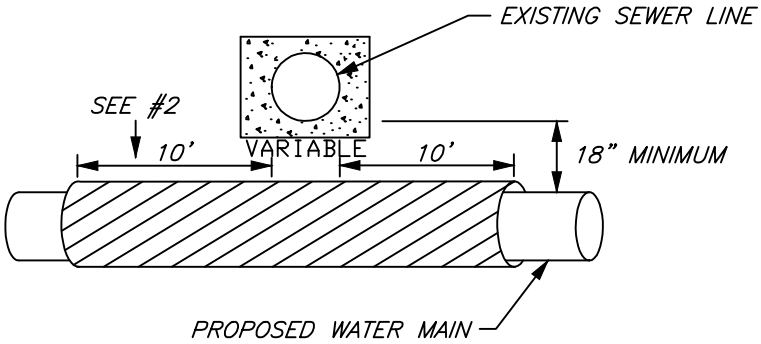

PLAN VIEW

PROPOSED WATER MAIN BELOW EXISTING SEWER LINE WITH LESS THAN 18" MINIMUM SEPARATION

*** NOT ALLOWED ***
MUST MAINTAIN 18" VERTICAL SEPARATION

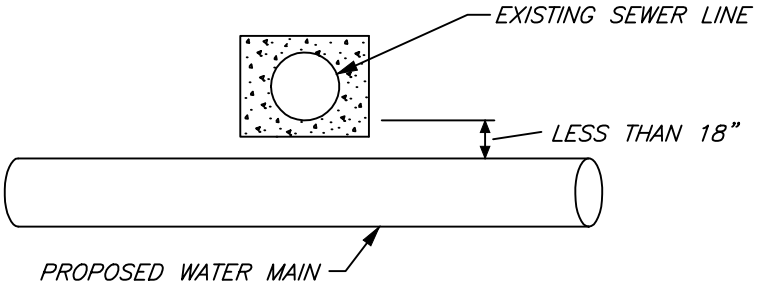

N.T.S.	DATE	REVISIONS	DRAWN BY	APPVD BY	STANDARD DETAIL
Village of DOWNERS GROVE FOUNDED IN 1832	02/20/07		W.J.M.	M.D.M.	WATER AND SEWER SEPARATION REQUIREMENTS VERTICAL SEPARATION BELOW
	03/25/11		S.A.V.	A.J.S.	
	03/01/15		S.A.V.	A.J.S.	
	01/01/17		N.R.H.	J.M.W.	
	01/01/18		N.R.H.	J.M.W.	
	DRAWING NO. WTR-04				
	I:\LIBRARY\DETAILS\WATER\WTR-04				

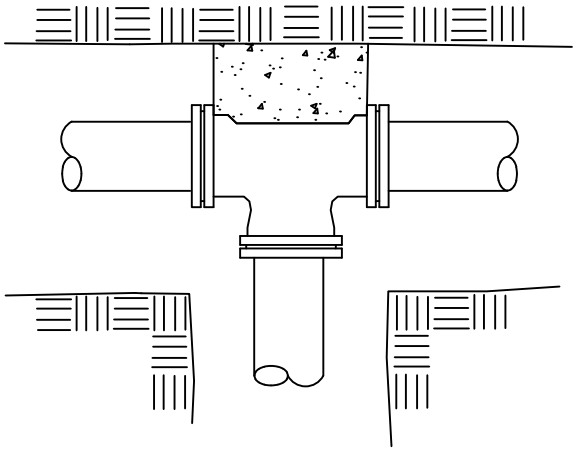

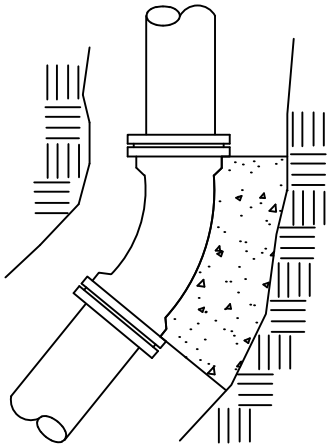

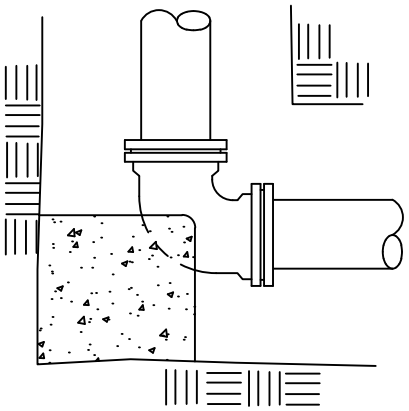

NOTES:

1. THRUST BLOCKS SHALL BE USED AT ALL BENDS 22-1/2 DEGREES OR GREATER
2. ALL BLOCKS TO BE 3000 P.S.I. CONCRETE
3. THE COST OF INSTALLING THE THRUST BLOCK SHALL BE INCIDENTAL TO THE CONSTRUCTION OF THE WATER MAIN

N.T.S.	DATE	REVISIONS	DRAWN BY	APPVD BY	STANDARD DETAIL
Village of DOWNERS GROVE FOUNDED IN 1832	02/20/07		W.J.M.	M.D.M.	TYPICAL THRUST BLOCK INSTALLATION
	03/25/11		S.A.V.	A.J.S.	
	03/01/15		A.J.S.	A.J.S.	
	01/01/17		N.R.H.	J.M.W.	
	01/01/18		N.R.H.	J.M.W.	
	DRAWING NO. WTR-05				
	I:\LIBRARY\DETAILS\WATER\WTR-05				

MEGALUG MECHANICAL JOINT RESTRAINT DETAIL

N.T.S.

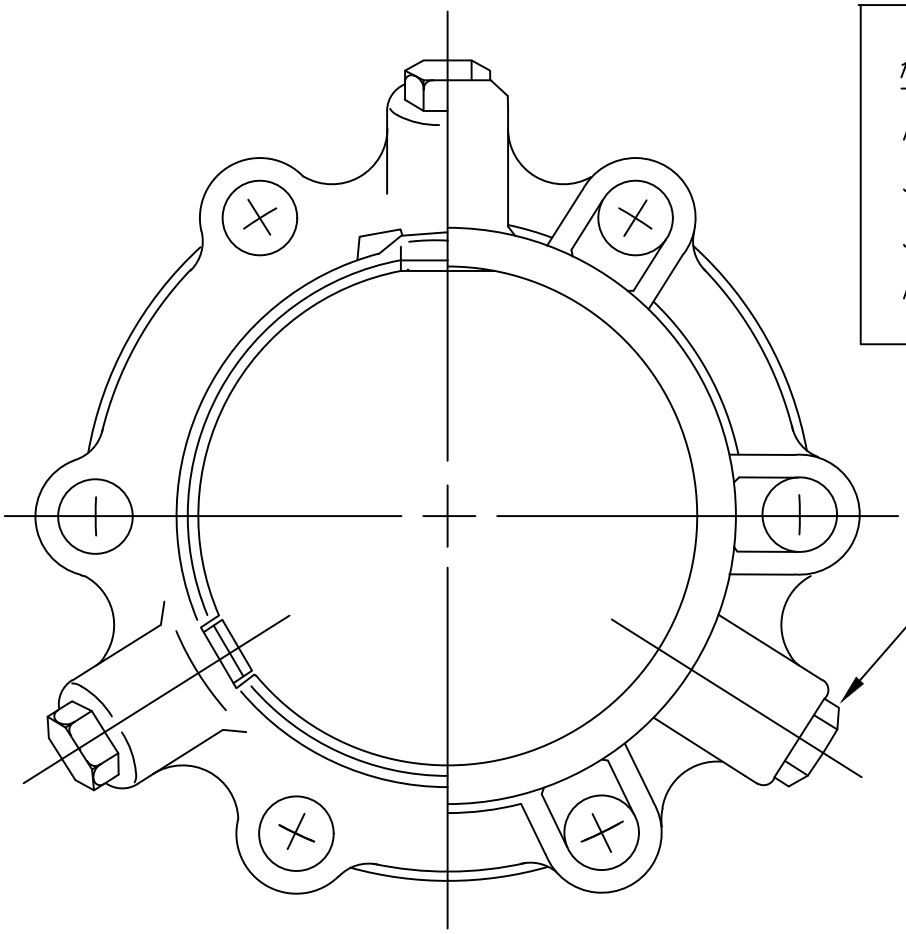

1100 SERIES SPECIFICATIONS:

NOMINAL PIPE SIZE=6"

SERIES NUMBER=1106

SHIPPING WT.=12.00 LBS.

RATED PRESSURE=250 @ 2:1

TWIST OFF NUTS SHALL BE USED TO INSURE PROPER ACTUATING OF THE RESTRAINING DEVICES.

REAR VIEW

FRONT VIEW

NOTES:

RESTRAINING DEVICES SHALL BE OF DUCTILE IRON HEAT TREATED TO A MINIMUM HARDNESS OF 370 BHN AND SHALL HAVE A WORKING PRESSURE OF AT LEAST 250 PSI WITH A MINIMUM SAFETY FACTOR OF 2:1 AND SHALL BE EBAA IRON, INC. EGALUG OR EQUAL.

ALL BOLTS & NUTS SHALL BE STAINLESS STEEL 304 T-BOLTS & 316 NUTS.

N.T.S.	DATE	REVISIONS	DRAWN BY	APPVD BY	STANDARD DETAIL
Village of DOWNERS GROVE FOUNDED IN 1832	03/25/11		S.A.V.	A.J.S.	MEGALUG MECHANICAL JOINT RESTRAINT
	03/01/15		S.A.V.	A.J.S.	
	01/01/17		N.R.H.	J.M.W.	
	08/18/17	BOLTS & NUTS GRADES	N.R.H.	J.M.W.	
	01/01/18		N.R.H.	J.M.W.	
	DRAWING NO. WTR-06				
	I:\LIBRARY\DETAILS\WATER\WTR-06				

CASING PIPE REQUIREMENTS

1. CASING PIPE SHALL BE NEW WELDED STEEL PIPE CAPABLE OF WITHSTANDING A MINIMUM FORCE OF 35,000 PSI AND SHALL MEET THE REQUIREMENTS OF ASTM-139, GRADE B

2. THE FOLLOWING TABLE SHALL DETERMINE THE DIAMETER SIZE AND WALL THICKNESS OF THE STEEL CASING PIPE:

DIA. OF WATER MAIN	DIA. OF CASING	MINIMUM WALL THICKNESS
6"	12"	.250"
8"	16"	.282"
12"	20"	.344"

3. ENDS OF CASING PIPE SHALL BE SEALED WITH BRICK AND MORTAR PRIOR TO BACKFILLING

4. ALTERNATE CASING PIPE MATERIALS MUST BE WATER MAIN QUALITY AND APPROVED BY THE VILLAGE OF DOWNERS GROVE WATER DEPARTMENT

ALL STAINLESS STEEL CASING SPACER
N.T.S.

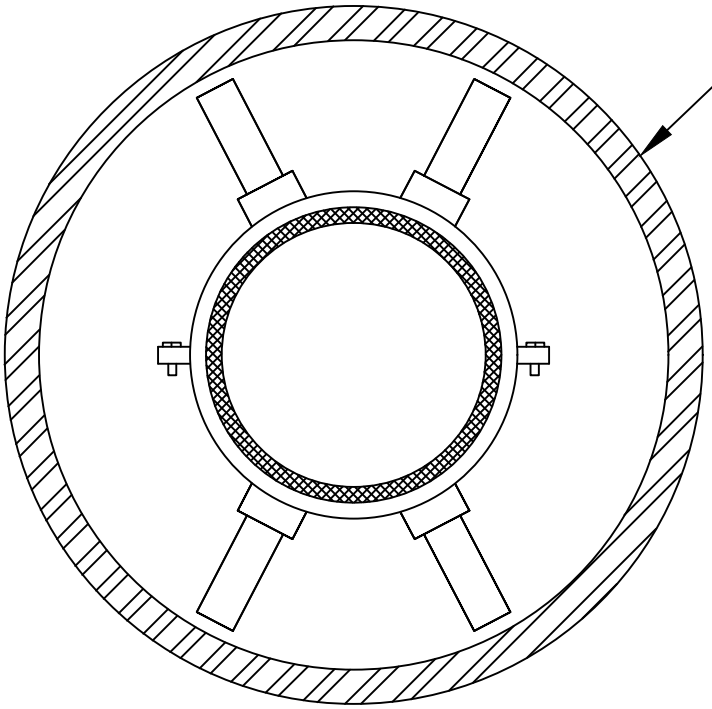

PROPOSED DUCTILE IRON OR STEEL PIPE SEE SPECIFICATIONS, FOR LOCATIONS WHERE SPACER IS APPLICABLE.

NOTE:

ONE SPACER SHALL BE PLACED NOT MORE THAN TWO FEET FROM EACH END OF CASING. SUBSEQUENT SPACERS SHALL BE PLACED AT 8' INTERVALS WITHIN THE CASING.

MATERIAL SPECIFICATIONS:

1. SHELL & RISER TO BE A MIN. 14 GAUGE T 304 STAINLESS STEEL
2. FASTENERS TO BE 5/16" T 304 STAINLESS STEEL
3. LINER TO BE PVC 090 THICK 85-90 DUROMETER
4. RUNNERS TO BE ULTRA HIGH MOLECULAR WEIGHT POLYMER

CENTERED: POSITION CARRIER IN CENTER OF CASING. PROVIDES RESTRAINT AGAINST MOVEMENT. BEST MECHANICALLY RESTRAINED PIPE JOINTS.

N.T.S.	DATE	REVISIONS	DRAWN BY	APPVD BY	STANDARD DETAIL
Village of DOWNERS GROVE FOUNDED IN 1832	02/20/07		W.J.M.	M.D.M.	CASING PIPE & ALL STAINLESS STEEL CASING SPACER
	03/25/11		S.A.V.	A.J.S.	
	03/01/15		S.A.V.	A.J.S.	
	01/01/17		N.R.H.	J.M.W.	
	01/01/18		N.R.H.	J.M.W.	
	DRAWING NO. WTR-07				
	I:\LIBRARY\DETAILS\WATER\WTR-07				

TYPICAL WATER VALVE VAULT

N.T.S.

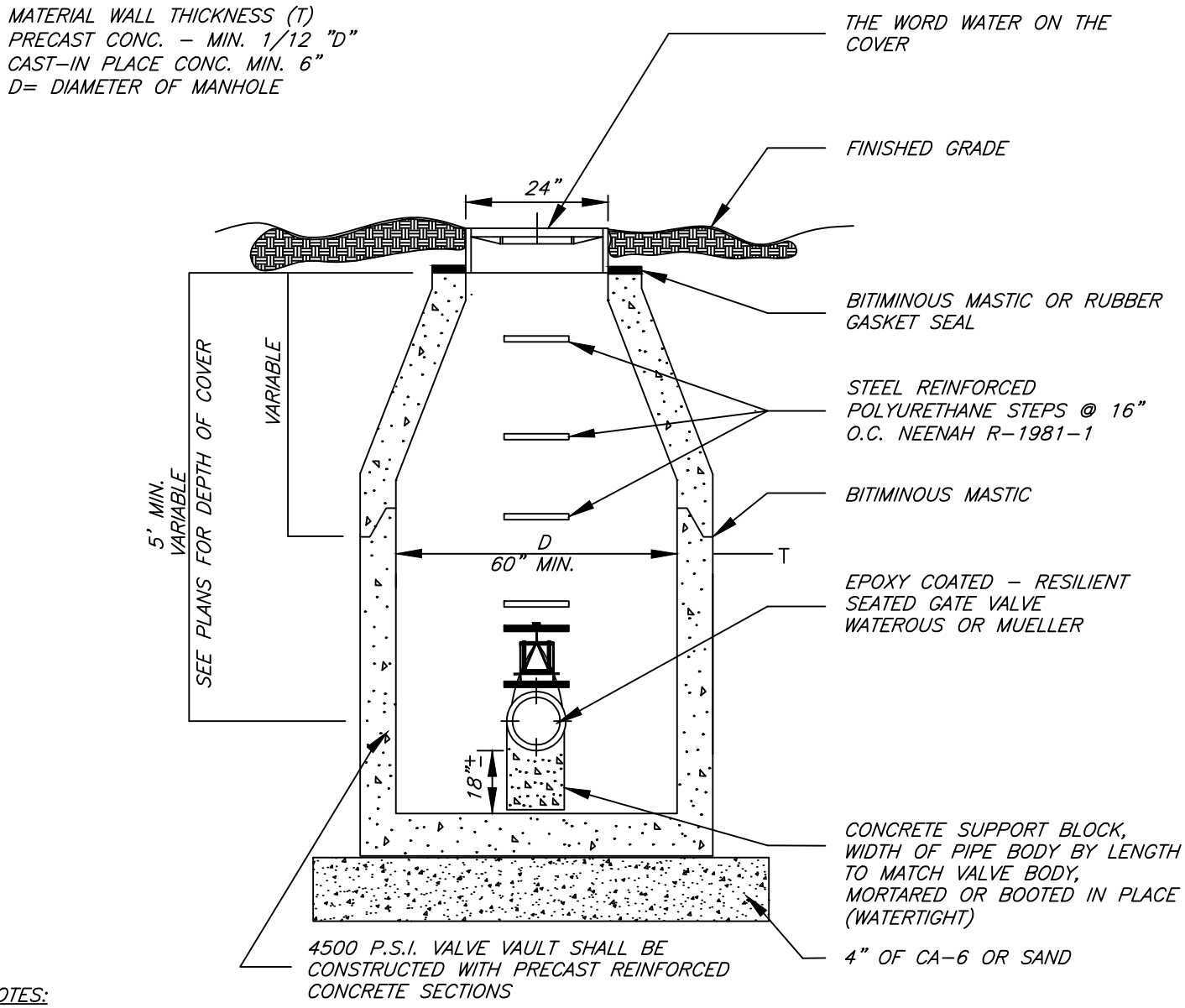

NOTES:

D = DIAMETER OF MANHOLE

VALVE VAULT DIAMETER SHALL BE 60" FOR VALVES 6" – 8"

VALVE VAULT DIAMETER SHALL BE 72" FOR VALVES 10" AND LARGER

ALL FITTINGS SHALL BE MEGALUG AND ALL BOLTS & NUTS SHALL BE STAINLESS STEEL 304 T–BOLTS & 316 NUTS.

ALL OPENINGS ON PRECAST VALVE VAULT SHALL BE BLOCKED AND MORTARED

N.T.S.	DATE	REVISIONS	DRAWN BY	APPVD BY	STANDARD DETAIL
Village of DOWNERS GROVE FOUNDED IN 1832	02/20/07		W.J.M.	M.D.M.	WATER VALVE VAULT
	03/25/11		S.A.V.	A.J.S.	
	03/01/15		S.A.V.	A.J.S.	
	01/01/17		N.R.H.	J.M.W.	
	01/01/18		N.R.H.	J.M.W.	
	DRAWING NO. WTR–08				
	I:\LIBRARY\DETAILS\WATER\WTR–08				

TYPICAL WATERMAIN PRESSURE CONNECTION

N.T.S.

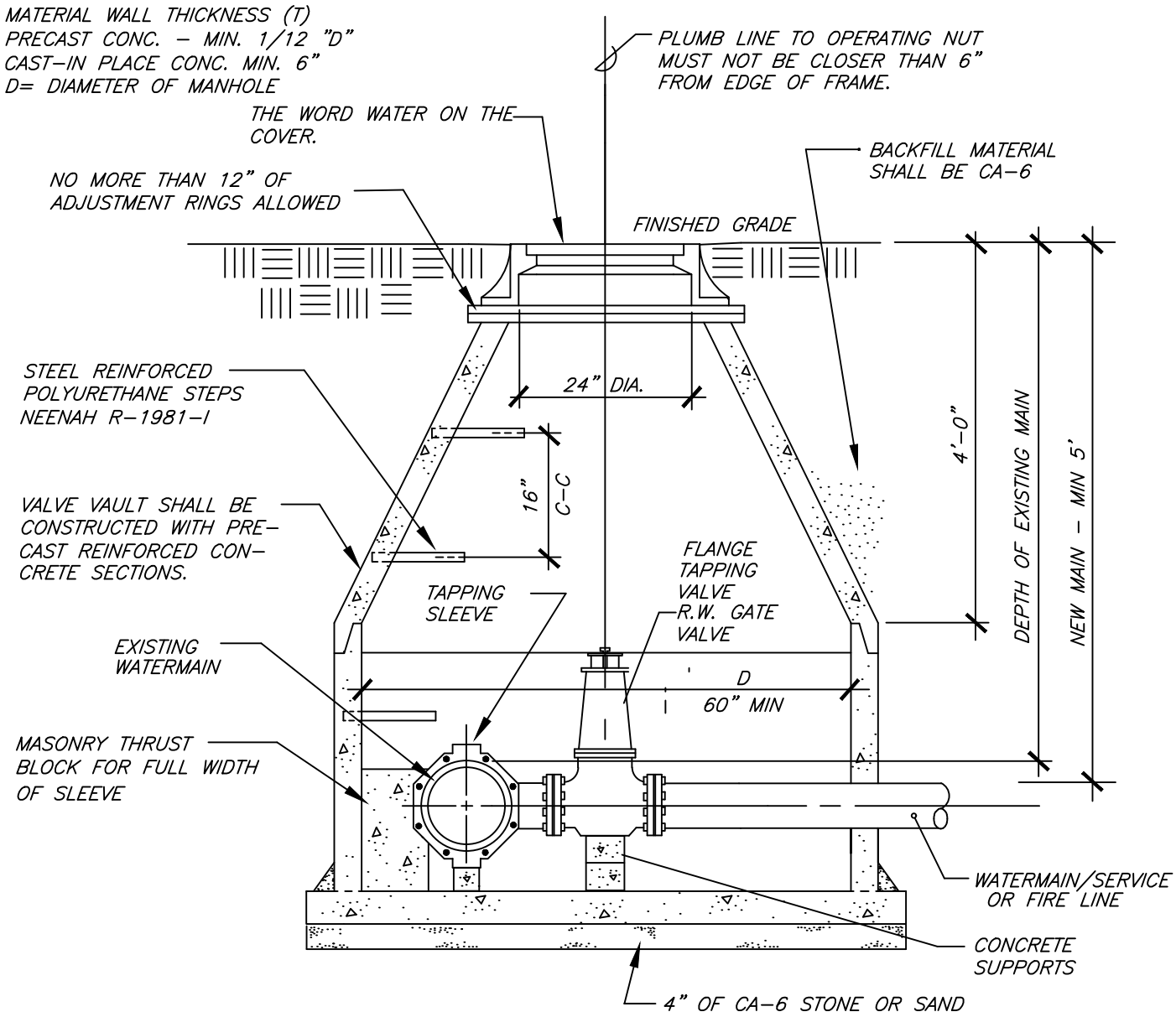

NOTES:
D = DIAMETER OF MANHOLE
VALVE VAULT DIAMETER SHALL BE 60" FOR VALVES 6" – 8"
VALVE VAULT DIAMETER SHALL BE 72" FOR VALVES 10" AND LARGER

ALL FITTINGS SHALL BE MEGALUG AND ALL BOLTS & NUTS SHALL BE STAINLESS STEEL 304 T–BOLTS & 316 NUTS.

ALL OPENINGS ON PRECAST VALVE VAULT SHALL BE BLOCKED AND MORTARED

N.T.S.	DATE	REVISIONS	DRAWN BY	APPVD BY	STANDARD DETAIL
Village of DOWNERS GROVE FOUNDED IN 1832	02/20/07		W.J.M.	M.D.M.	WATERMAIN PRESSURE CONNECTION
	03/25/11		S.A.V.	A.J.S.	
	03/01/15		S.A.V.	A.J.S.	
	01/01/17		N.R.H.	J.M.W.	
	01/01/18		N.R.H.	J.M.W.	
	DRAWING NO. WTR–09				
	I:\LIBRARY\DETAILS\WATER\WTR–09				

FIRE HYDRANT

N.T.S.

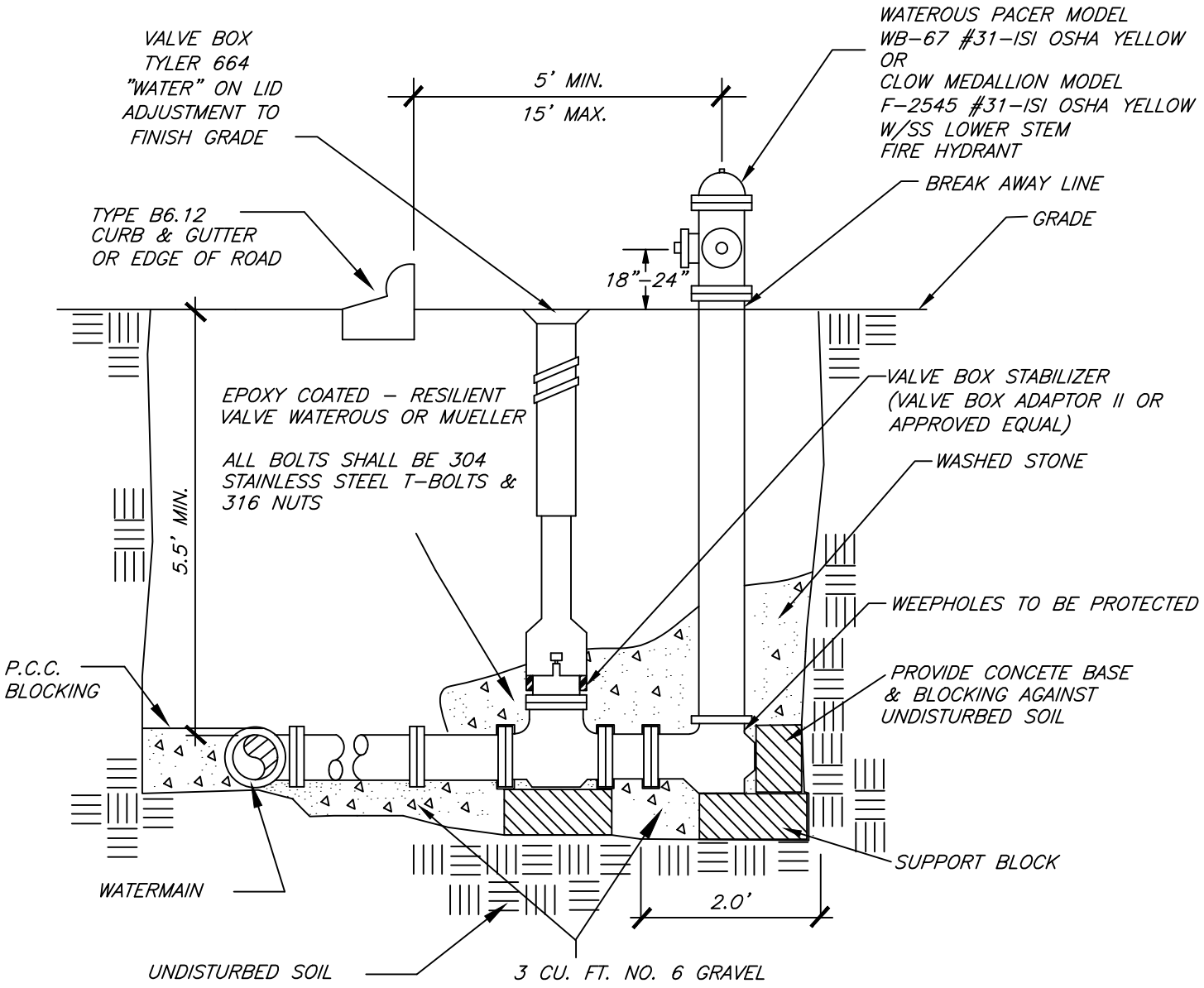

GUIDELINES

HYDRANTS SHALL BE LOCATED NOT LESS THAN FIVE FEET (5) NOR MORE THAN TEN FEET (10) BEHIND THE CURB ON IMPROVED STREETS

HYDRANTS SHALL BE LOCATED NOT LESS THAN SIX FEET (6) NOR MORE THAN FIFTEEN FEET (15) BEHIND PAVEMENT ON UNIMPROVED STREETS

N.T.S.	DATE	REVISIONS	DRAWN BY	APPVD BY	STANDARD DETAIL
Village of DOWNERS GROVE FOUNDED IN 1832	03/02/20		N.R.H.	J.M.W.	TYPICAL HYDRANT INSTALLATION
	DRAWING NO. WTR-10				
	I:\LIBRARY\DETAILS\WATER\WTR-10				

TAP SERVICE CONNECTION

N.T.S.

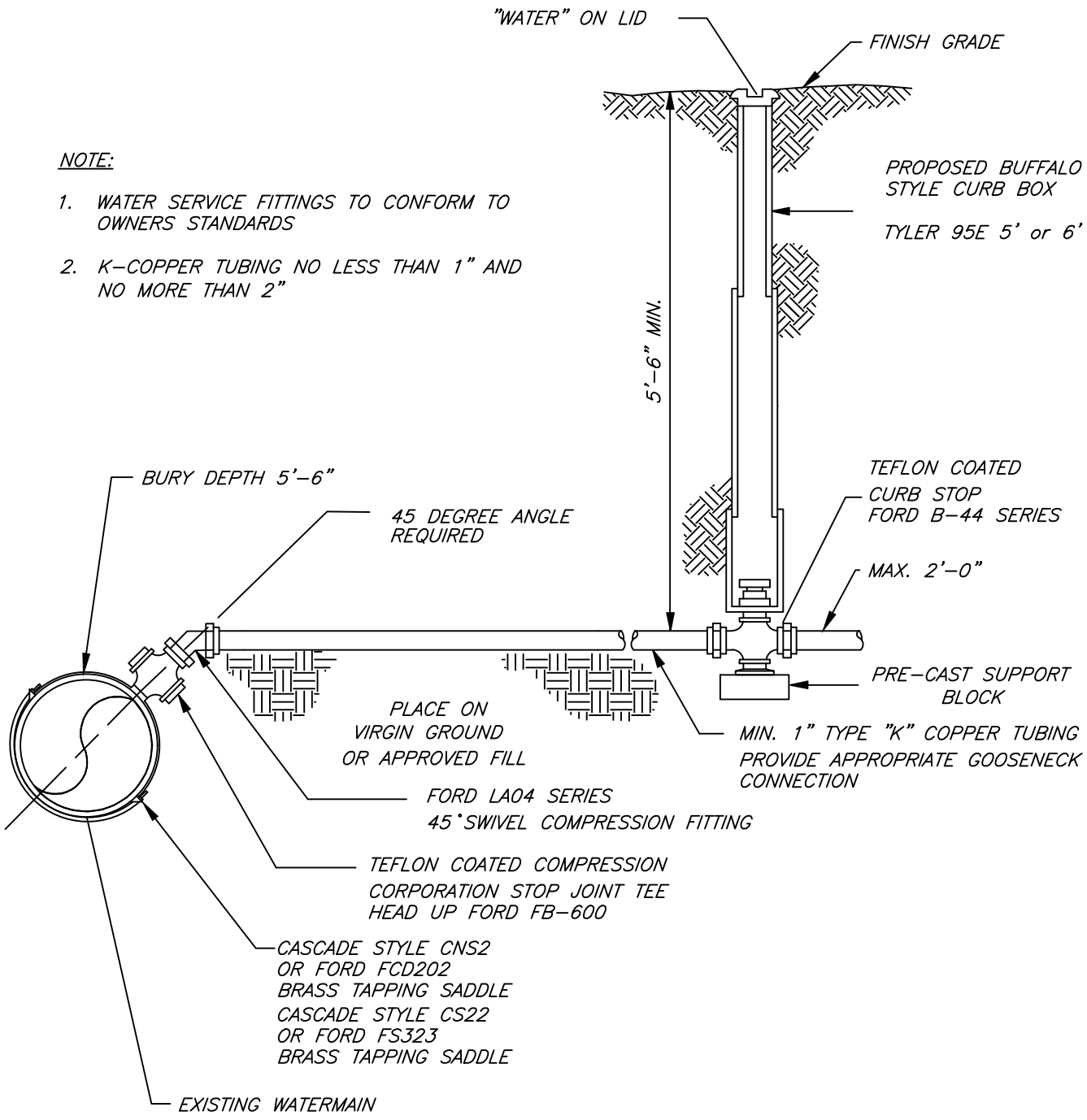

NOTE:

1. WATER SERVICE FITTINGS TO CONFORM TO OWNERS STANDARDS
2. K-COPPER TUBING NO LESS THAN 1" AND NO MORE THAN 2"

N.T.S.	DATE	REVISIONS	DRAWN BY	APPVD BY	STANDARD DETAIL
Village of DOWNERS GROVE FOUNDED IN 1832	03/02/20		N.R.H	J.M.W.	TYPICAL TAP SERVICE CONNECTION
	DRAWING NO. WTR-11				
	I:\LIBRARY\DETAILS\WATER\WTR-11				

2" MAX. STANDARD WATER SERVICE CONNECTION BUFFALO BOX TO HOUSE
N.T.S.

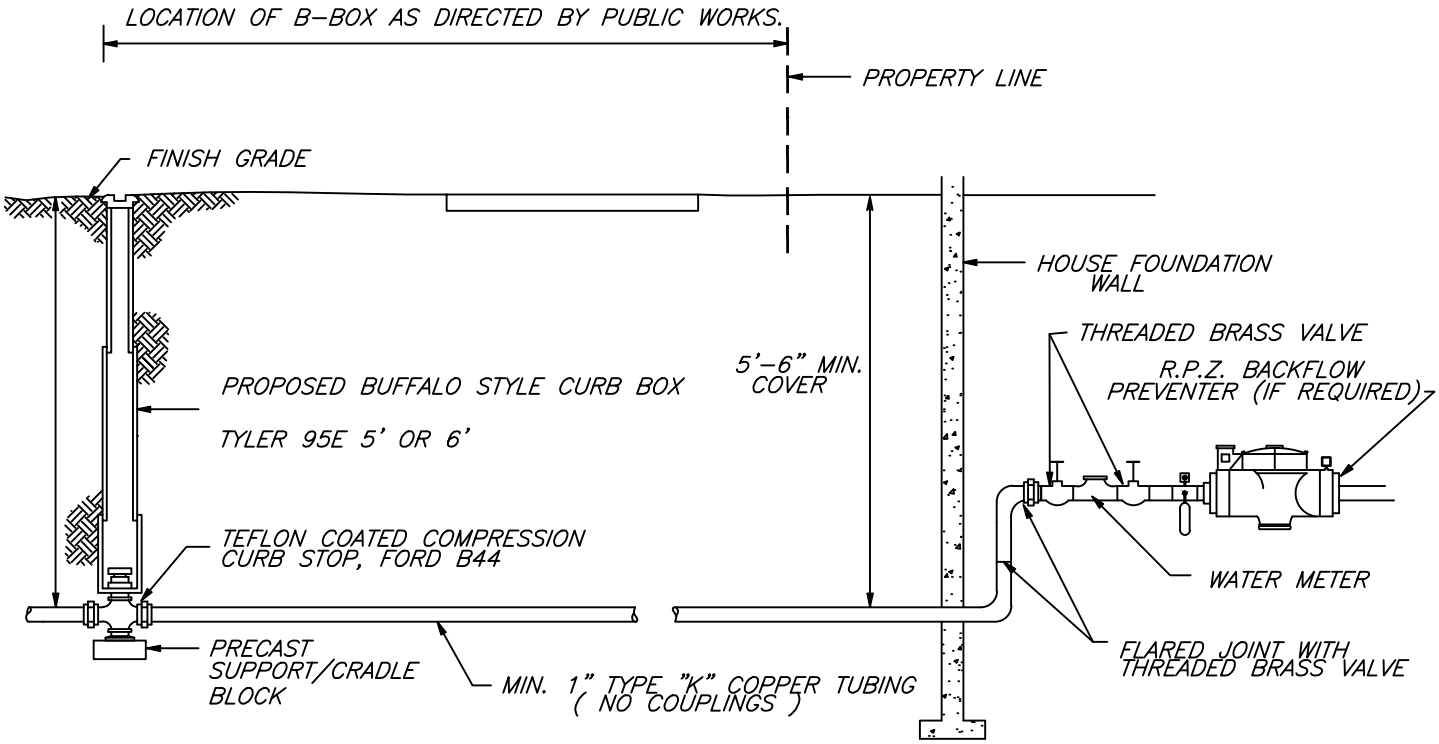

NOTE:

TEN FOOT MINIMUM HORIZONTAL SEPERATION BETWEEN WATER SERVICE AND SEWER MUST BE MAINTAINED UP TO AND THROUGH HOUSE FOUNDATION OR AS DIRECTED BY PUBLIC WORKS DIRECTOR

ACTUAL WATER SERVICE SIZE MAY VARY IN ACCORDANCE WITH THE ILLINOIS STATE PLUMBING CODE

N.T.S.	DATE	REVISIONS	DRAWN BY	APPVD BY	STANDARD DETAIL
Village of DOWNERS GROVE FOUNDED IN 1832	03/25/11		S.A.V.	A.J.S.	TYPICAL WATER SERVICE CONNECTION FROM B-BOX TO HOUSE
	03/01/15		S.A.V.	A.J.S.	
	01/01/17		N.R.H.	J.M.W.	
	08/18/17	ADDED TYLER 95E ONLY	N.R.H.	J.M.W.	
	01/01/18		N.R.H.	J.M.W.	
	DRAWING NO. WTR-12				
	I:\LIBRARY\DETAILS\WATER\WTR-12				

Municipal Codes regarding trees, including tree protection requirements for public parkway trees, are located in Chapter 24 of the Downers Grove Municipal Code http://www.downers.us/code/chapters/24 . Parkway tree protection shall involve avoiding damage to both the above ground tree trunk, including the branches, and the below ground root system. Roots are the most vital part of a tree with the majority of nutrient and water absorbing roots in the upper 18 to 24 inches of soil. Tree roots must be protected from severing or changes in their soil environment (such as compaction or grade changes) to prevent irreversible tree decline or death in the coming years.

The Critical Root Zone, or CRZ, is the area immediately surrounding a tree that needs to be protected from damage. The size of this area, measured from the center of the tree, is ideally a circle with a radius of one foot for each inch of trunk diameter. The depth of the CRZ extends to 4 feet below the natural ground surface level. In a municipal parkway setting with utilities and paved or concrete surfaces, the CRZ cannot always be the ideal size. Instead, the CRZ has been adjusted to form a rectangle around the parkway tree trunk with the minimum dimensions listed in the following table. At a minimum, the listed CRZ shall be fenced with a 6 foot high temporary chain link construction fence secured to metal posts spaced no further than 10 feet apart. Whenever possible, the entire parkway shall be fenced in except where access has been permitted. Any exceptions shall be noted on the drawings submitted for a given permit.

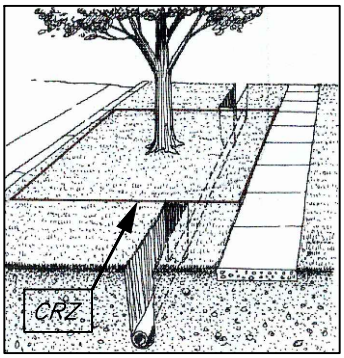

PARKWAY TREE DIAMETER AT 4.5'	WIDTH FROM STREET TO PROPERTY (MINIMUM CURB TO SIDEWALK)	LENGTH ALONG STREET (MINIMUM)	DEPTH
0–12.0 INCHES	10.0 FEET	10 FEET	4 FEET
12.1–24.0 INCHES	10.0 FEET	20 FEET	4 FEET
24.1 OR MORE INCHES	10.0 FEET	30 FEET	4 FEET

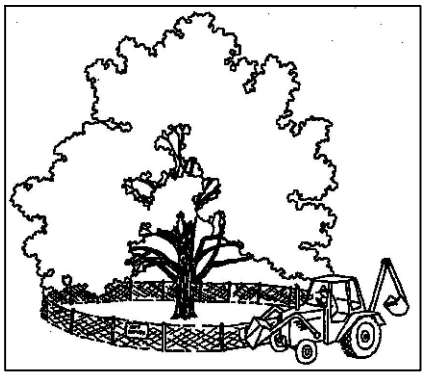

For public parkway trees, roots located within the determined CRZ shall be protected from compaction, severing, and the storage of materials or equipment. Utilities must be augered underneath the tree as shown above. In cases when severing of roots within a portion of the CRZ may be unavoidable (ex. sidewalk installation, curb replacement, water main or sanitary main disconnects in the parkway), subject to the approval of the Village Forester, the smallest possible area shall be disturbed and sharp clean cuts shall be made on root ends to promote wound closure and root regeneration. All CRZ fencing shall be a 6 foot high temporary chain link construction fence secured to metal posts spaced no further than 10 feet apart, and shall be maintained daily in good condition. Any exceptions to the fence dimensions or parkway position shall be noted on the permit.

In addition to fines and citations that may be assessed for violations of any Chapter 24 municipal code (such as not maintaining fencing around the CRZ or unauthorized removal of parkway trees), violators may be subject to the following provisions:

- *issuance of an invoice for the monetary loss in tree value or partial value due to damage to either the above ground or below ground portions of the parkway tree, or unauthorized tree removal.*
- *forfeiture of bonds issued for the work should funds be sufficient to cover tree values and fines.*
- *costs of repairs, such as pruning or cabling, or costs for removal of the damaged parkway tree along with the stump if the tree cannot remain in the right–of–way.*
- *fines of $500 for the 1st offense; $1,000 for the 2nd offense; $2,500 for 3rd and subsequent offenses.*
- *each day during which a violation continues shall be construed as a separate and distinct offense.*

For more information, contact the Forestry Division at 630–434–5475 or 630–434–5476.

TREE CITY USA

N.T.S.	DATE	REVISIONS	DRAWN BY	APPVD BY	STANDARD DETAIL
Village of DOWNERS GROVE FOUNDED IN 1832	02/20/07		J.M.L.	M.D.M.	PARKWAY TREE PROTECTION REQUIREMENTS
	03/25/11		S.A.V.	A.J.S.	
	03/01/15		S.A.V.	A.J.S.	
	01/01/17		N.R.H.	J.M.W.	
	01/01/18		N.R.H.	J.M.W.	
	DRAWING NO. TRE–01				
	I:\LIBRARY\DETAILS\TREES\TRE–01				

SUITABLE TREE SPECIES FOR PLANTING IN PARKWAYS OF DOWNERS GROVE

TREES WITH LARGE MATURE HEIGHTS FOR PARKWAYS WITH ADEQUATE SPACE	PLANTING SEASON AVAILABLE	THRIVES IN NEW SUBDIVISIONS?
COMMONLY AVAILABLE:		
FREEMAN MAPLE	SPRING AND FALL	YES
NORWAY MAPLE (NO CRIMSON LEAF CULTIVARS)	SPRING AND FALL	YES
SUGAR MAPLE	SPRING AND FALL	VARIES
KENTUCKY COFFEETREE	SPRING AND FALL	YES
HYBRID ELMS	SPRING AND FALL	YES
HACKBERRY	SPRING AND FALL	YES
HONEYLOCUST (THORNLESS AND SEEDLESS)	SPRING AND FALL	YES
AMERICAN LINDEN	SPRING AND FALL	YES
LITTLELEAF LINDEN	SPRING AND FALL	YES
BUR OAK	SPRING	YES
ENGLISH OAK INCLUDING HYBRID OAKS	SPRING	YES
SWAMP WHITE OAK	SPRING	YES
PEAR (CULTIVARS OTHER THAN BRADFORD)	SPRING	YES
MAY HAVE LIMITED AVAILABILITY:		
BALDCYPRESS	SPRING	VARIES
RIVER BIRCH	SPRING	VARIES
HORNBEAM, AMERICAN OR EUROPEAN	SPRING	VARIES
RED HORSECHESTNUT	SPRING	VARIES
CATALPA	SPRING AND FALL	YES
GINKGO	SPRING AND FALL	NO
IRONWOOD	SPRING	NO
SILVER LINDEN	SPRING AND FALL	VARIES
MIYABE MAPLE	SPRING AND FALL	YES
CHINKAPIN OAK	SPRING	YES
RED OAK	SPRING	NO
SHINGLE OAK	SPRING	YES
LONDON PLANETREE	SPRING	VARIES
SWEETGUM	SPRING	VARIES
TURKISH FILBERT	SPRING AND FALL	VARIES
TULIPTREE	SPRING	VARIES

TREES WITH SHORT MATURE HEIGHTS FOR PARKWAYS WITH OVERHEAD WIRES	PLANTING SEASON AVAILABLE	THRIVES IN NEW SUBDIVISIONS?
CRABAPPLE (SELECTIONS WITHOUT LARGE FRUIT OR DISEASE PROBLEMS)	SPRING AND FALL	YES
COCKSPUR HAWTHORN (THORNLESS)	SPRING AND FALL	YES
CORNELIANCHERRY DOGWOOD	SPRING AND FALL	VARIES
DWARF MAPLES	SPRING AND FALL	YES
SERVICEBERRY SPP.	SPRING AND FALL	YES
JAPANESE TREE LILAC	SPRING AND FALL	YES

THE FORESTRY DIVISION MAY APPROVE ADDITIONAL TREE SPECIES NOT CURRENTLY LISTED.

N.T.S.	DATE	REVISIONS	DRAWN BY	APPVD BY	STANDARD DETAIL
Village of DOWNERS GROVE FOUNDED IN 1832	09/28/07		J.M.L.	M.D.M.	SUITABLE PARKWAY TREE SPECIES LIST
	03/25/11		S.A.V.	A.J.S.	
	03/01/15		S.A.V.	A.J.S.	
	01/01/17		N.R.H.	J.M.W.	
	01/01/18		N.R.H.	J.M.W.	
	DRAWING NO. TRE-02				
	I:\LIBRARY\DETAILS\TREES\TRE-02				

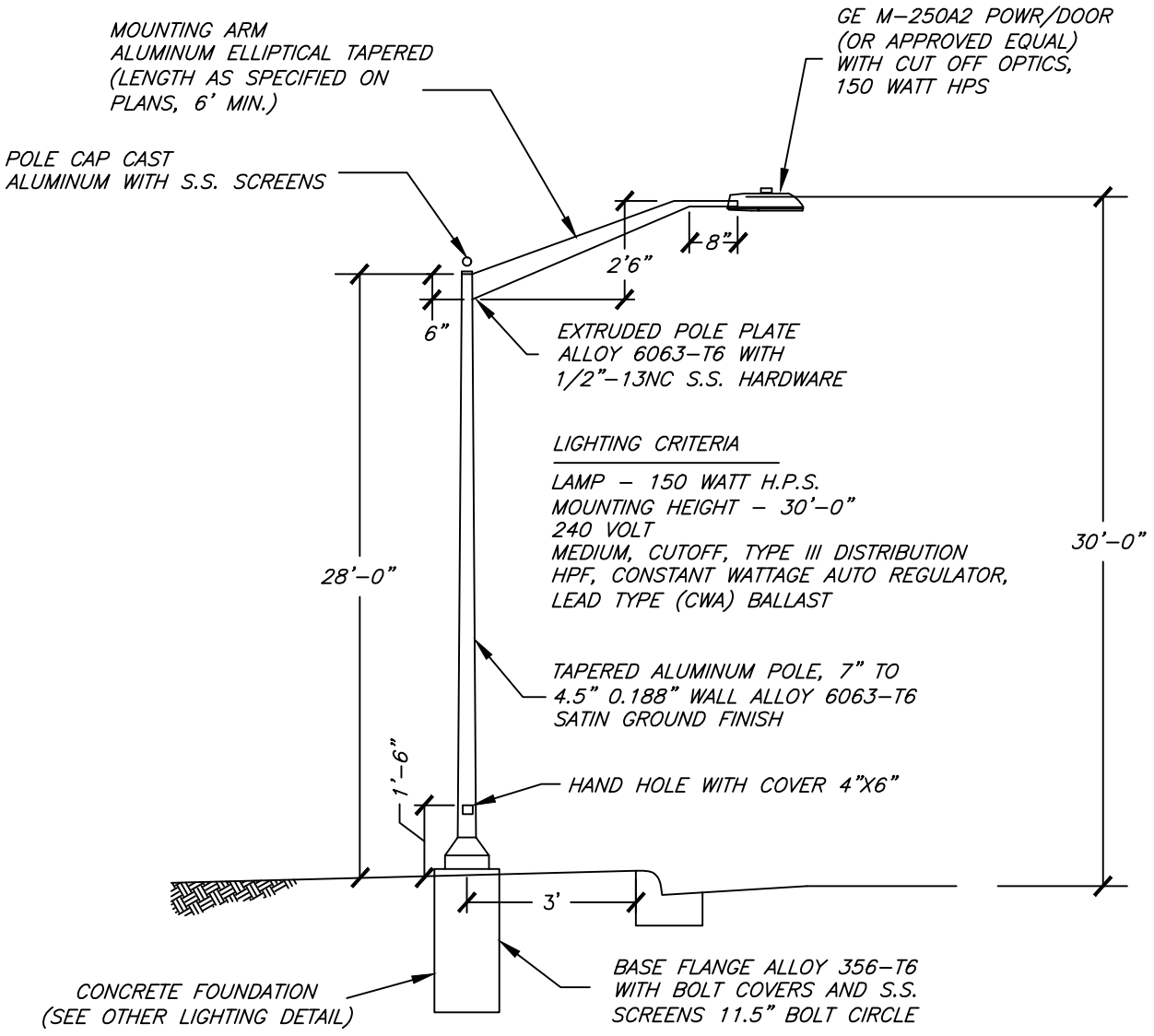

N.T.S.	DATE	REVISIONS	DRAWN BY	APPVD BY	STANDARD DETAIL
Village of DOWNERS GROVE FOUNDED IN 1832	02/20/07		D.J.G.	M.D.M.	LIGHT POLE DETAIL 1
	03/25/11		S.A.V.	A.J.S.	
	01/01/18		N.R.H	J.M.W.	
	DRAWING NO. SLT-01				
	I:\LIBRARY\DETAILS\ELECTRICAL\SLT-01				

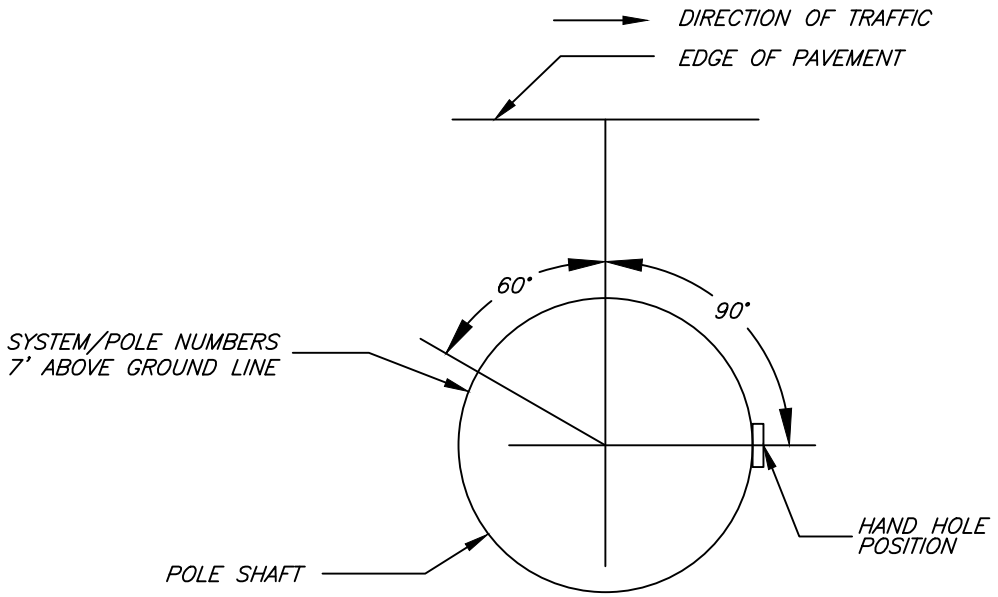

N.T.S.	DATE	REVISIONS	DRAWN BY	APPVD BY	STANDARD DETAIL
Village of DOWNERS GROVE FOUNDED IN 1832	02/20/07		D.J.G.	M.D.M.	LIGHT POLE DETAIL 2
	03/25/11		S.A.V.	A.J.S.	
	01/01/18		N.R.H	J.M.W.	
	DRAWING NO. SLT-02				
	I:\LIBRARY\DETAILS\ELECTRICAL\SLT-02				

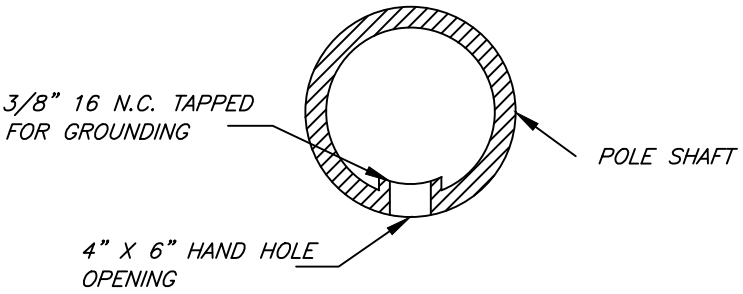

HAND HOLE DETAIL

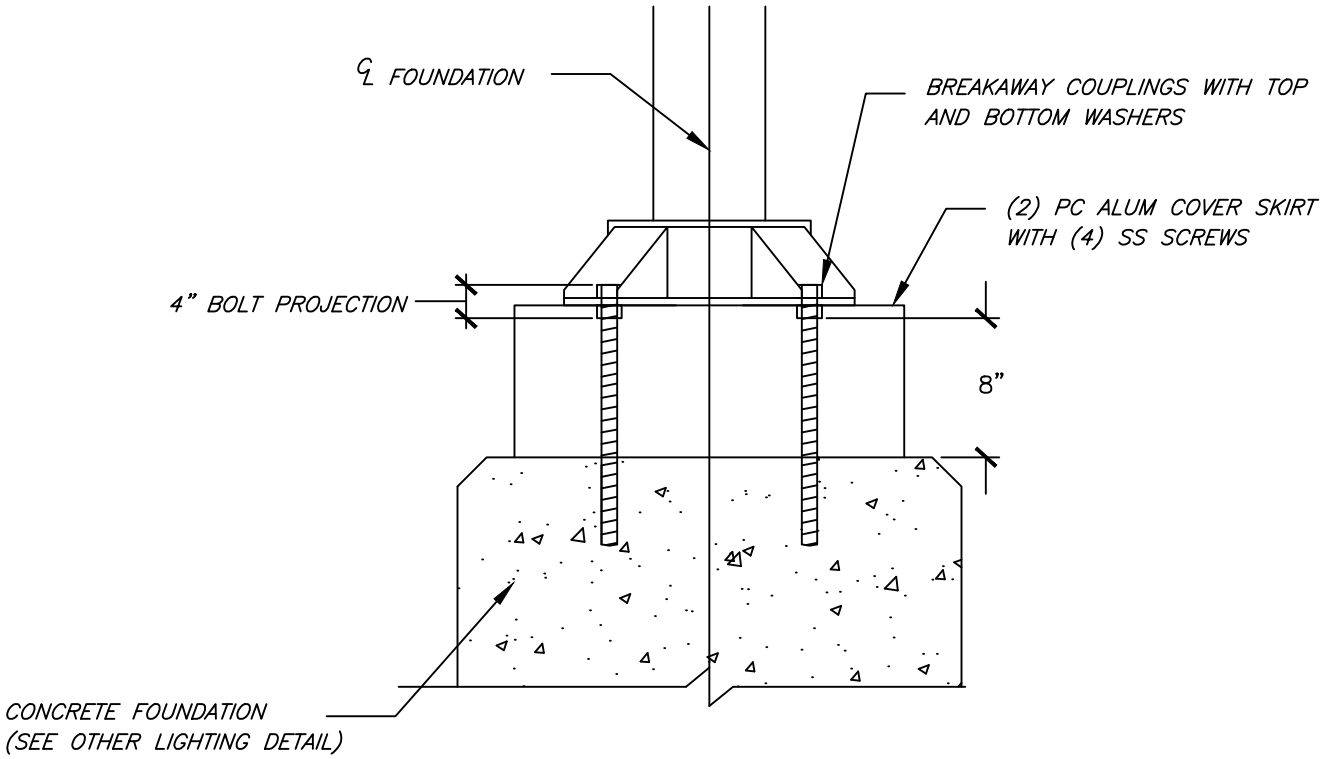

BREAKAWAY COUPLING DETAIL

N.T.S.	DATE	REVISIONS	DRAWN BY	APPVD BY	STANDARD DETAIL
Village of DOWNERS GROVE FOUNDED IN 1832	02/20/07		D.J.G.	M.D.M.	LIGHT POLE DETAIL 3
	03/25/11		S.A.V.	A.J.S.	
	01/01/18		N.R.H.	J.M.W.	
	DRAWING NO. SLT-03				
	I:\LIBRARY\DETAILS\ELECTRICAL\SLT-03				

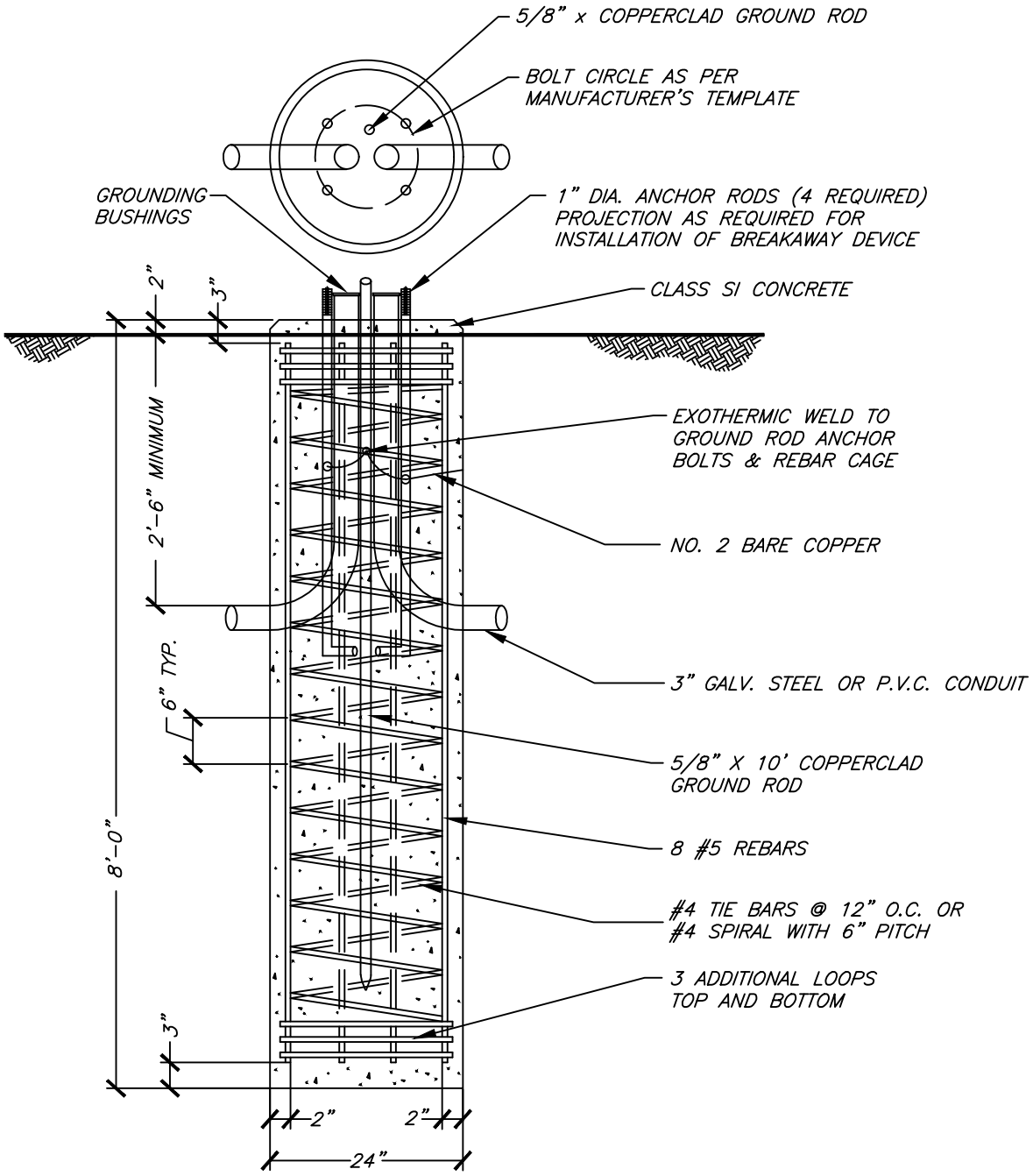

N.T.S.	DATE	REVISIONS	DRAWN BY	APPVD BY	STANDARD DETAIL
Village of DOWNERS GROVE FOUNDED IN 1832	02/20/07		D.J.G.	M.D.M.	LIGHT POLE FOUNDATION
	03/25/11		S.A.V.	A.J.S.	
	01/01/18		N.R.H.	J.M.W.	
	DRAWING NO. SLT-04				
	I:\LIBRARY\DETAILS\ELECTRICAL\SLT-04				

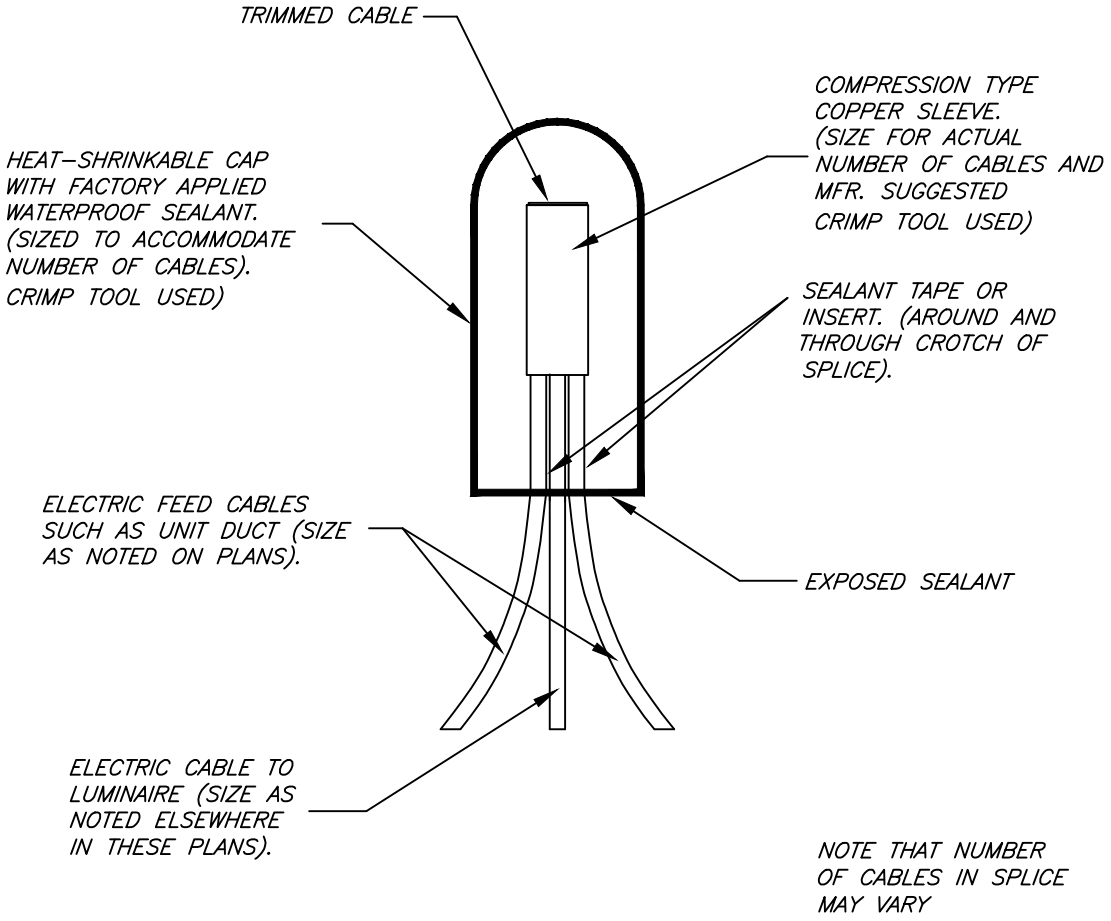

NOTE THAT NUMBER OF CABLES IN SPLICE MAY VARY

N.T.S.	DATE	REVISIONS	DRAWN BY	APPVD BY	STANDARD DETAIL
Village of DOWNERS GROVE FOUNDED IN 1832	02/20/07		D.J.G.	M.D.M.	CABLE SPLICE
	03/25/11		S.A.V.	A.J.S.	
	01/01/18		N.R.H.	J.M.W.	
	DRAWING NO. SLT-05				
	I:\LIBRARY\DETAILS\ELECTRICAL\SLT-05				

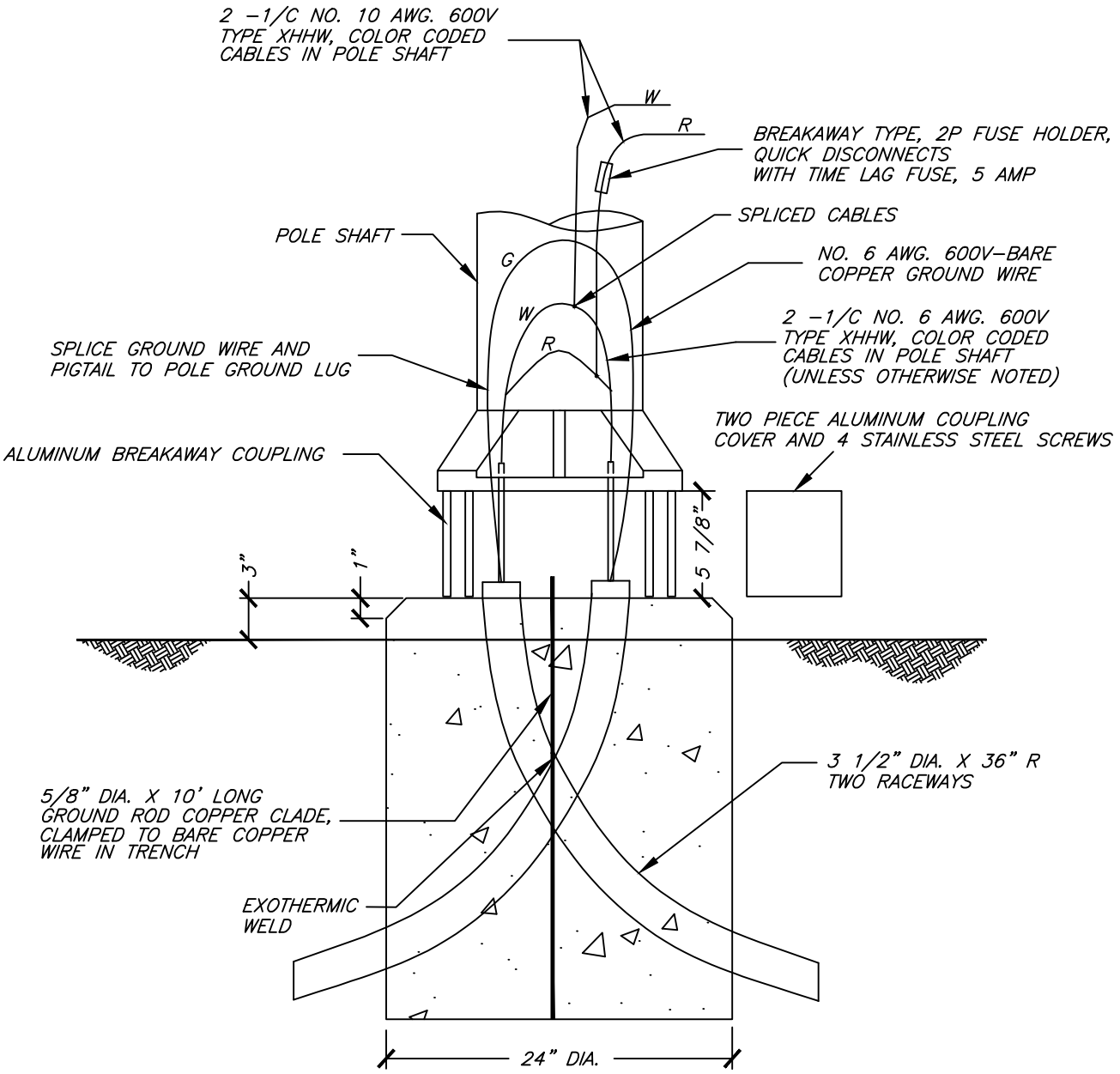

POLE BASE WIRING DETAIL

NO SCALE

N.T.S.	DATE	REVISIONS	DRAWN BY	APPVD BY	STANDARD DETAIL
Village of DOWNERS GROVE FOUNDED IN 1832	02/20/07		D.J.G.	M.D.M.	POLE BASE WIRING
	03/25/11		S.A.V.	A.J.S.	
	01/01/18		N.R.H.	J.M.W.	
	DRAWING NO. SLT-06				
	I:\LIBRARY\DETAILS\ELECTRICAL\SLT-06				

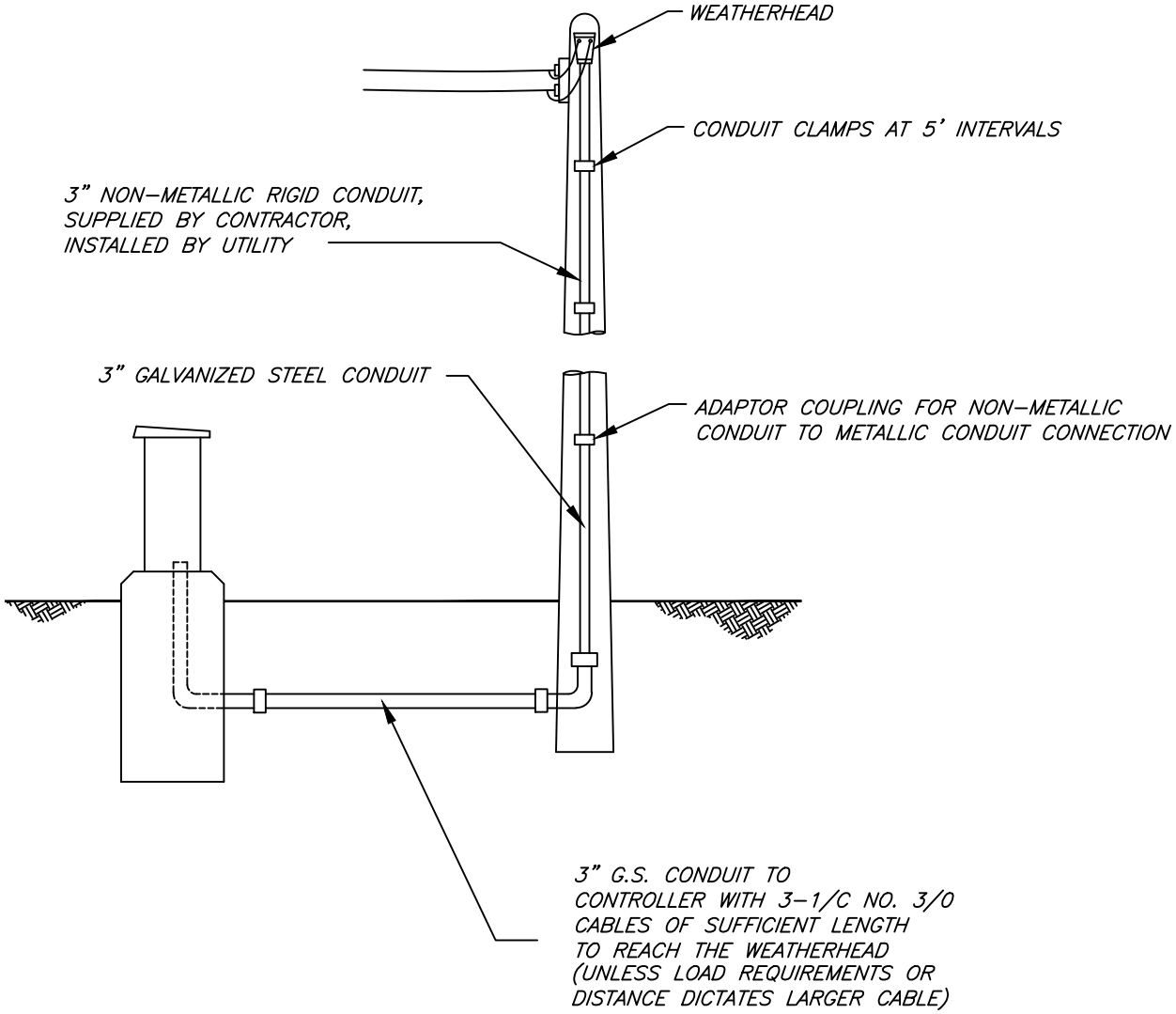

N.T.S.	DATE	REVISIONS	DRAWN BY	APPVD BY	STANDARD DETAIL
Village of DOWNERS GROVE FOUNDED IN 1832	02/20/07		D.J.G.	M.D.M.	OVERHEAD SERVICE DROP
	03/25/11		S.A.V.	A.J.S.	
	01/01/18		N.R.H.	J.M.W.	
	DRAWING NO. SLT-07				
	I:\LIBRARY\DETAILS\ELECTRICAL\SLT-07				

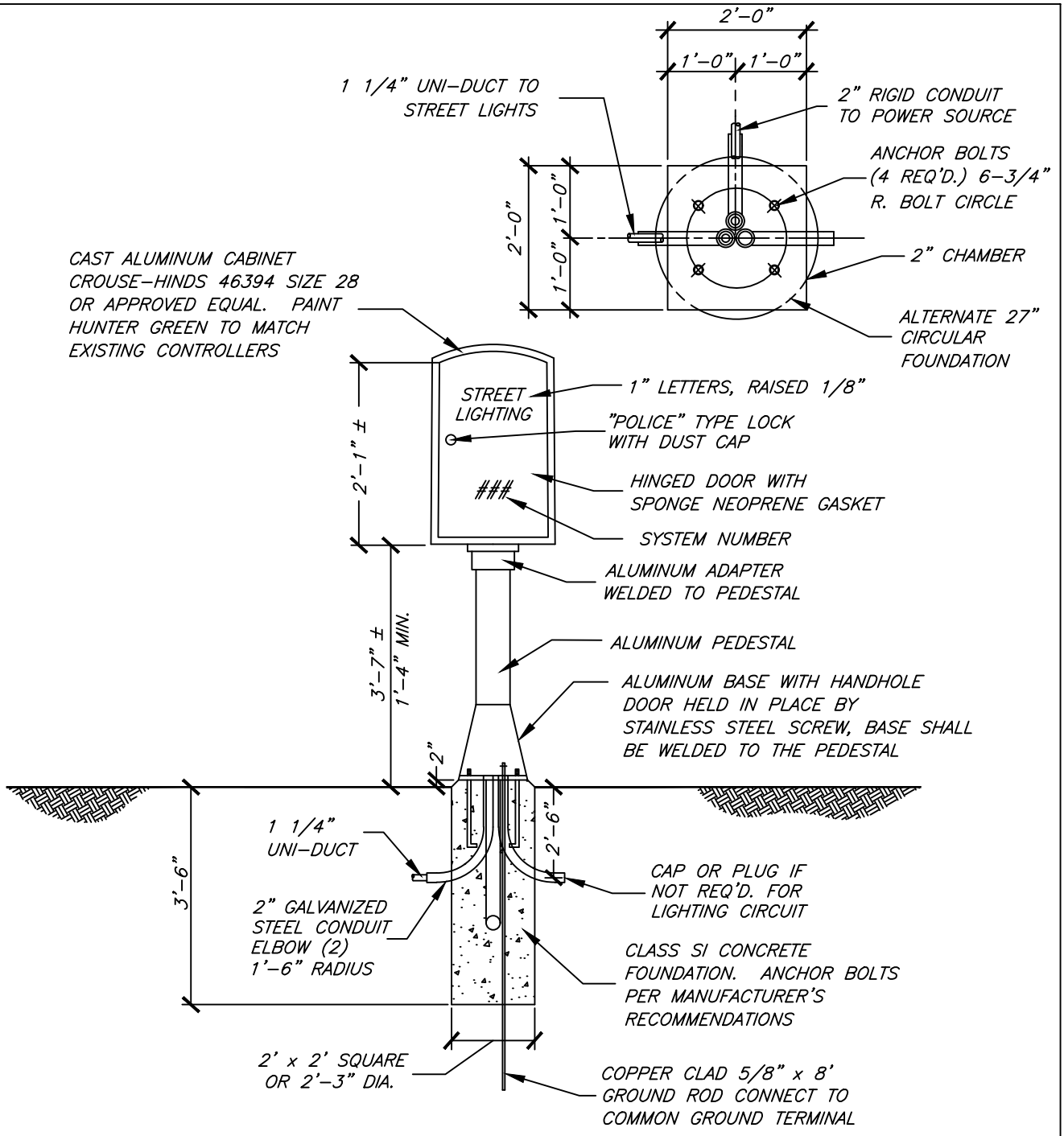

N.T.S.	DATE	REVISIONS	DRAWN BY	APPVD BY	STANDARD DETAIL
Village of DOWNERS GROVE FOUNDED IN 1832	02/20/07		D.J.G.	M.D.M.	STREET LIGHT CONTROLLER CABINET
	03/25/11		S.A.V.	A.J.S.	
	01/01/18		N.R.H.	J.M.W.	

DRAWING NO. SLT-08

I:\LIBRARY\DETAILS\ELECTRICAL\SLT-08

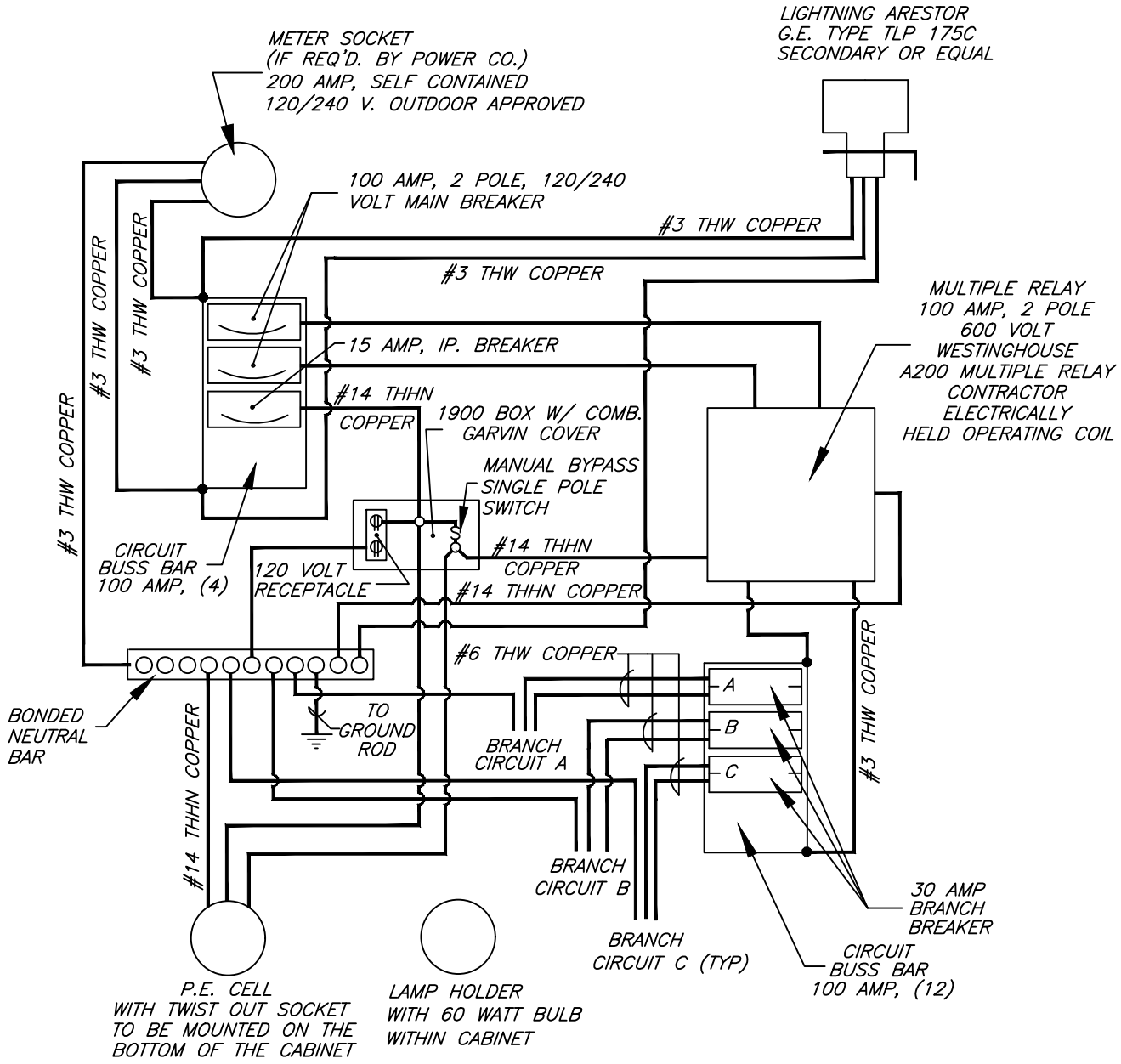

N.T.S.	DATE	REVISIONS	DRAWN BY	APPVD BY	STANDARD DETAIL
Village of DOWNERS GROVE FOUNDED IN 1832	02/20/07		D.J.G.	M.D.M.	ELECTRIC DIAGRAM FOR CONTROLLER
	03/25/11		S.A.V.	A.J.S.	
	01/01/18		N.R.H.	J.M.W.	

DRAWING NO. SLT–09

I:\LIBRARY\DETAILS\ELECTRICAL\SLT–09

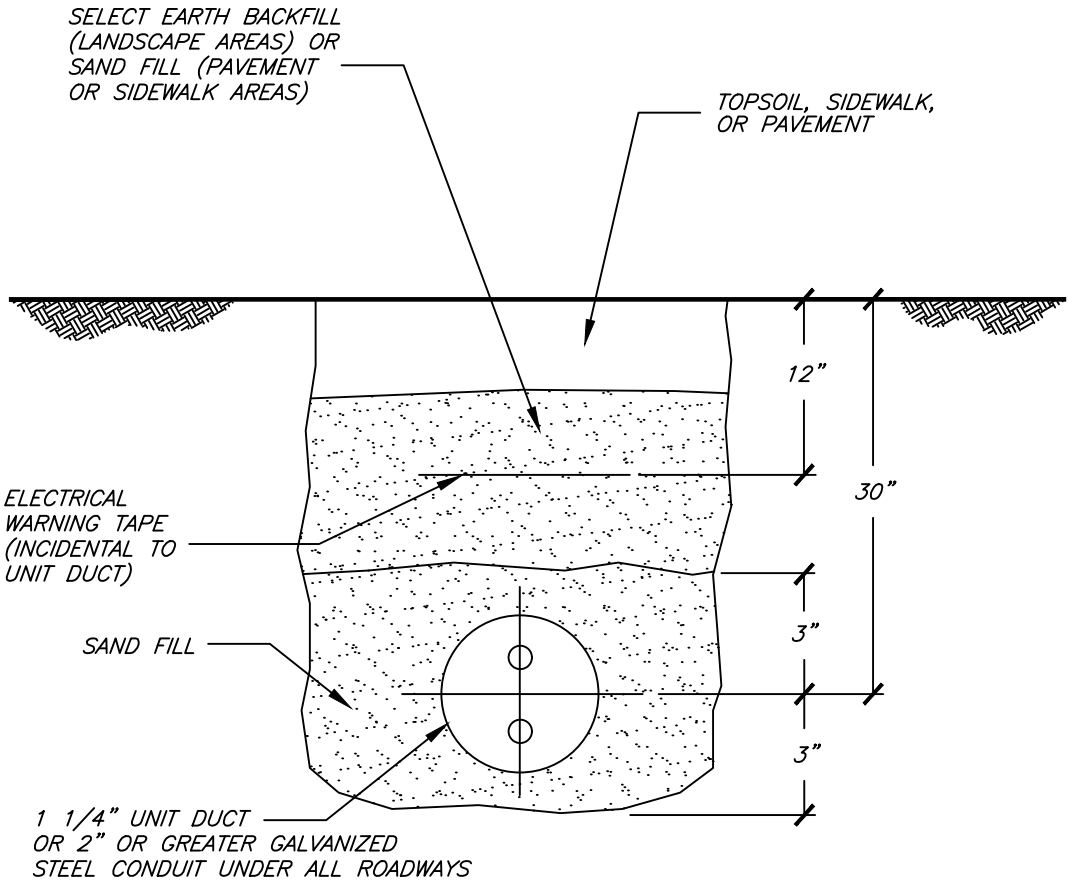

N.T.S.	DATE	REVISIONS	DRAWN BY	APPVD BY	STANDARD DETAIL
Village of DOWNERS GROVE FOUNDED IN 1832	02/20/07		D.J.G.	M.D.M.	UNIT DUCT TRENCH PROFILE
	03/25/11		S.A.V.	A.J.S.	
	01/01/18		N.R.H.	J.M.W.	
	DRAWING NO. SLT-10				
	I:\LIBRARY\DETAILS\ELECTRICAL\SLT-10				

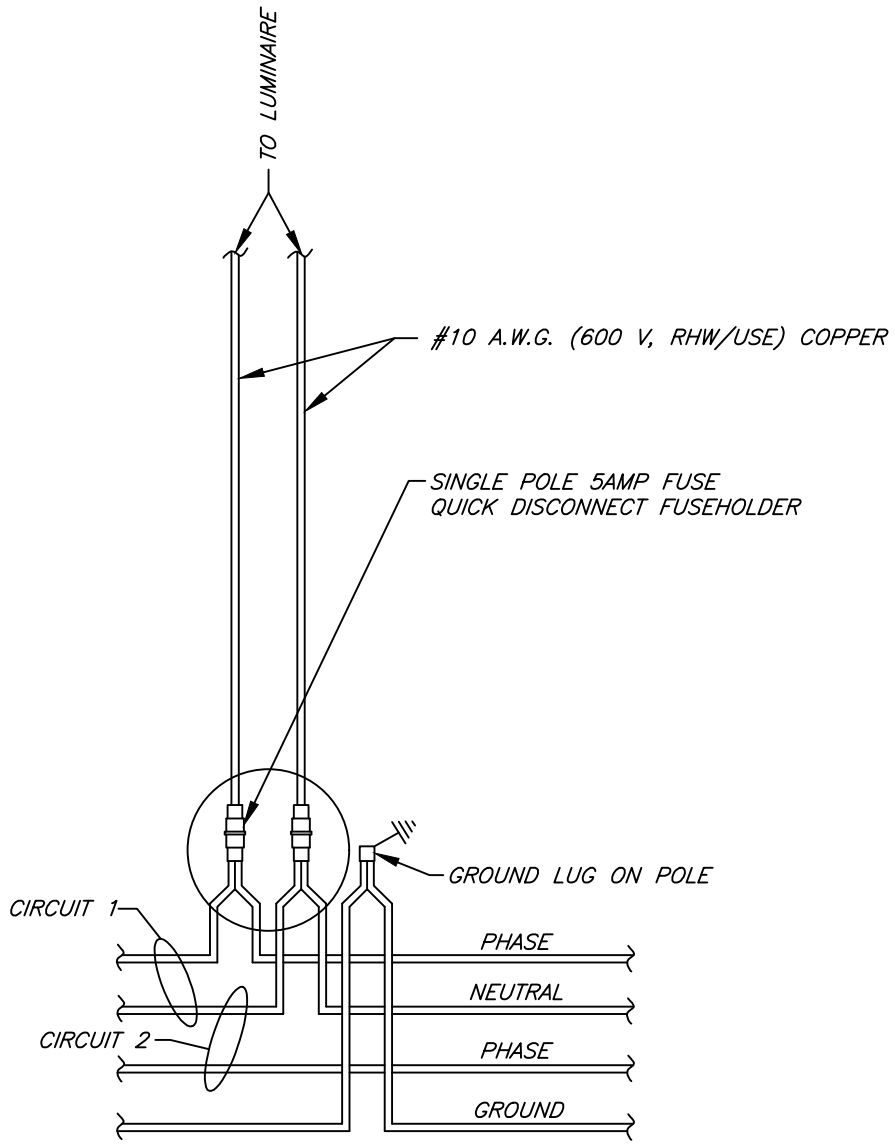

N.T.S.	DATE	REVISIONS	DRAWN BY	APPVD BY	STANDARD DETAIL
Village of DOWNERS GROVE FOUNDED IN 1832	02/20/07		D.J.G.	M.D.M.	POLE WIRING ON NEW CONTROLLER
	03/25/11		S.A.V.	A.J.S.	
	01/01/18		N.R.H.	J.M.W.	
	DRAWING NO. SLT-11				
	I:\LIBRARY\DETAILS\ELECTRICAL\SLT-11				

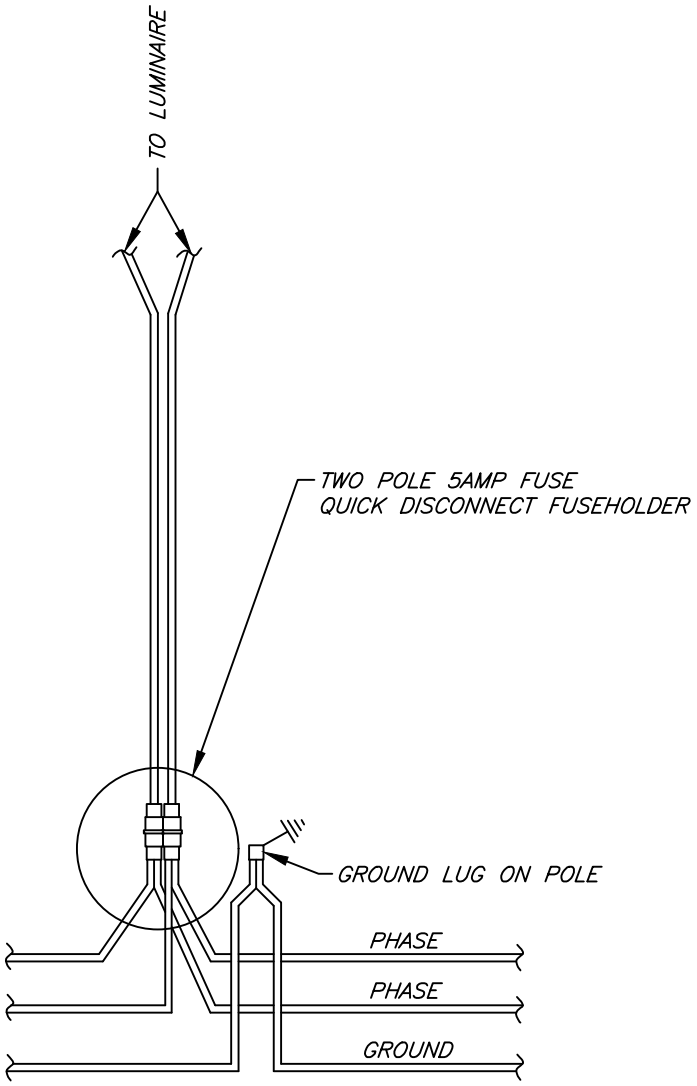

N.T.S.	DATE	REVISIONS	DRAWN BY	APPVD BY	STANDARD DETAIL
Village of DOWNERS GROVE FOUNDED IN 1832	02/20/07		D.J.G.	M.D.M.	POLE WIRING ON OLD CONTROLLER
	03/25/11		S.A.V.	A.J.S.	
	01/01/18		N.R.H.	J.M.W.	
	DRAWING NO. SLT-12				
	I:\LIBRARY\DETAILS\ELECTRICAL\SLT-12				

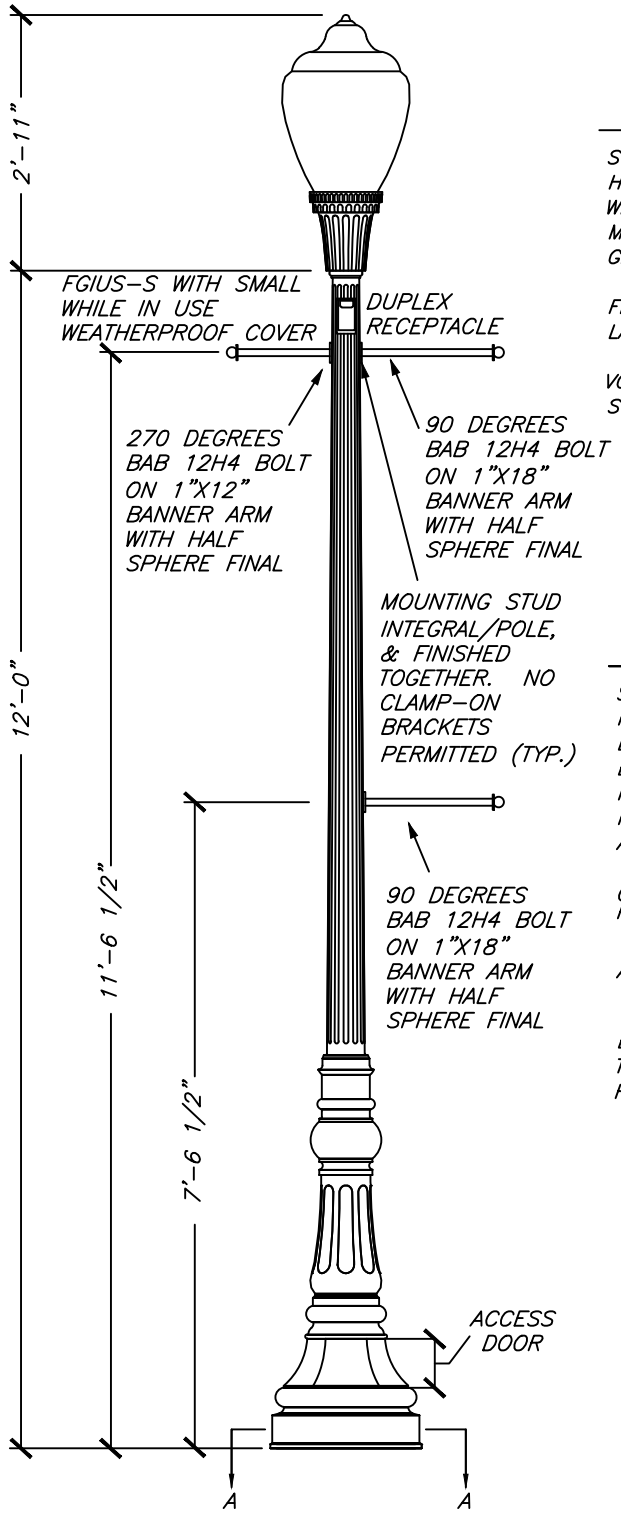

LUMINAIRE SPECIFICATIONS

STYLE:	FXB130, ACORN POLY-CARBON-LEAF PATTERN
HEIGHT:	31 1/4"
WIDTH:	15 5/8" DIA.
MATERIAL:	CAST ALUMINUM
GLOBE:	FP-199 ACORN GLOBE, WITH IES TYPE iii BOROSILATE GLASS REFRACTOR.
FINISH:	FINISH PAINT - SEMI GLOSS BLACK
LAMPING:	100 WATT HIGH PRESSURE SODIUM (LAMP BY OTHERS)
VOLTAGE:	120 VOLT
SOCKET:	MOGUL BASE

LAMP POST SPECIFICATIONS

STYLE:	WPMA12-CFTP, MARINER SERIES
HEIGHT:	11' - 11 7/8"
LIGHT CETER:	13'- 8 7/8"
BASE:	18 1/2" DIAMETER
MATERIAL:	CAST ALUMINUM
FINISH:	FINISH PAINT - SEMI GLOSS BLACK
ACCESS DOOR:	LOCATED IN BASE SECURED WITH TAMPER PROOF HEX SOCKET SECURITY MACHINE SCREWS
GROUND STUD PROVISIONS:	DRILL AND TAP INSIDE WALL OF BASE OPPOSITE ACCESS DOOR TO ACCOMMODATE A 1/4"-20 GROUND STUD (GROUND STUD SUPPLIED BY OTHERS)
ANCHOR BOLTS:	(4) 3/4 X 24"+ 3" HOOK (FULLY GALVANIZED WITH 2 GALVANIZED NUTS AND 2 GALVANIZED WASHERS PER BOLT)
BOLT PROJECTION:	3" REQUIRED
TENON:	2 7/8" DIA. X 3" HIGH
RECEPTACLE:	DUPLEX GFCI RECEPTACLE LOCATED AS SHOWN

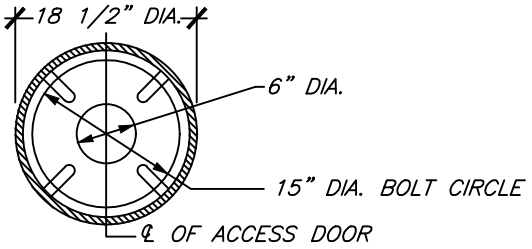

SECTION A-A

N.T.S.	DATE	REVISIONS	DRAWN BY	APPVD BY	STANDARD DETAIL
Village of DOWNERS GROVE FOUNDED IN 1832	02/20/07		D.J.G.		ORNAMENTAL POLE/ LIGHT FIXTURE STYLE A
	06/06/07	Per PSRT & Mike	D.J.G.	M.D.M.	
	03/25/11		S.A.V.	A.J.S.	
	01/01/18		N.R.H.	J.M.W.	

DRAWING NO. SLT-13

I:\LIBRARY\DETAILS\ELECTRICAL\SLT-13

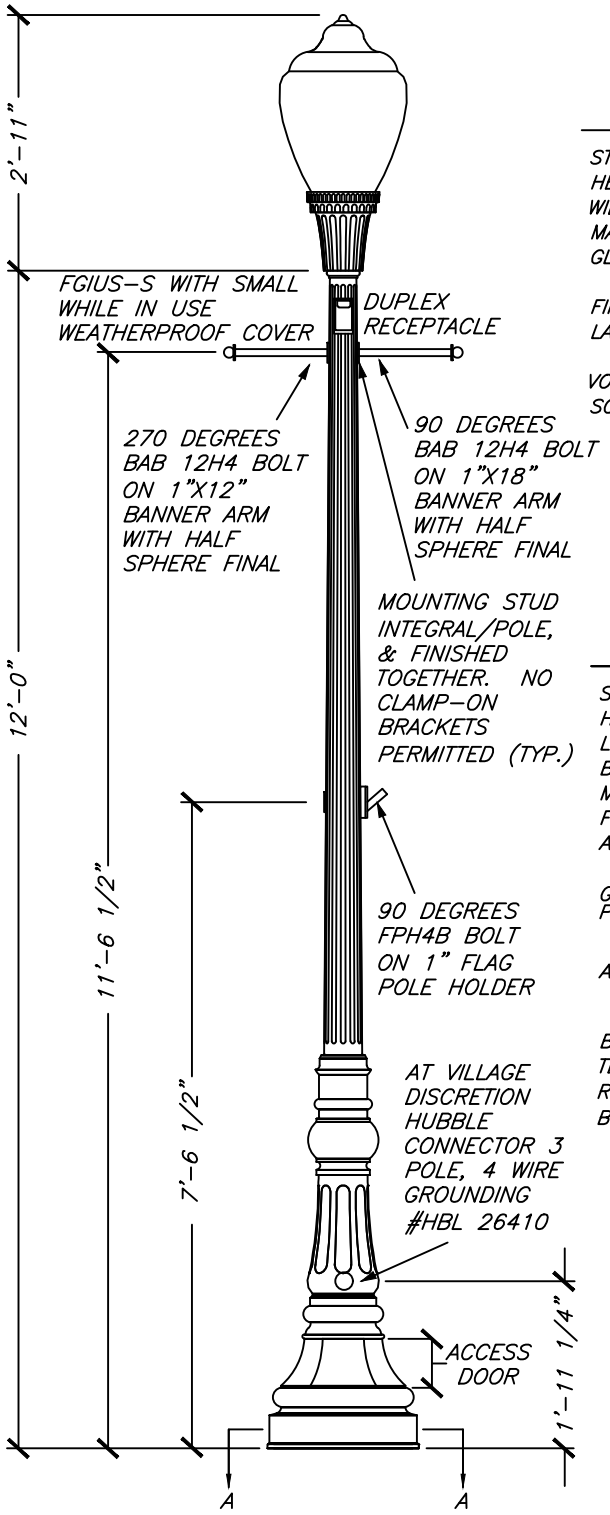

LUMINAIRE SPECIFICATIONS

STYLE:	FXB130, ACORN POLY-CARBON-LEAF PATTERN
HEIGHT:	31 1/4"
WIDTH:	15 5/8" DIA.
MATERIAL:	CAST ALUMINUM
GLOBE:	FP-199 ACORN GLOBE, WITH IES TYPE iii BOROSILATE GLASS REFRACTOR.
FINISH:	FINISH PAINT - SEMI GLOSS BLACK
LAMPING:	100 WATT HIGH PRESSURE SODIUM (LAMP BY OTHERS)
VOLTAGE:	120 VOLT
SOCKET:	MOGUL BASE

LAMP POST SPECIFICATIONS

STYLE:	WPMA12-CFTP, MARINER SERIES
HEIGHT:	11' - 11 7/8"
LIGHT CETER:	13'- 8 7/8"
BASE:	18 1/2" DIAMETER
MATERIAL:	CAST ALUMINUM
FINISH:	FINISH PAINT - SEMI GLOSS BLACK
ACCESS DOOR:	LOCATED IN BASE SECURED WITH TAMPER PROOF HEX SOCKET SECURITY MACHINE SCREWS
GROUND STUD PROVISIONS:	DRILL AND TAP INSIDE WALL OF BASE OPPOSITE ACCESS DOOR TO ACCOMMODATE A 1/4"-20 GROUND STUD (GROUND STUD SUPPLIED BY OTHERS)
ANCHOR BOLTS:	(4) 3/4 X 24"+ 3" HOOK (FULLY GALVANIZED WITH 2 GALVANIZED NUTS AND 2 GALVANIZED WASHERS PER BOLT)
BOLT PROJECTION:	3" REQUIRED
TENON:	2 7/8" DIA. X 3" HIGH
RECEPTACLE:	DUPLEX GFCI RECEPTACLE LOCATED AS SHOWN
BREAKAWAY FUSE:	PER CURRENT IDOT STANDARD FOR ALL LIGHT POLES

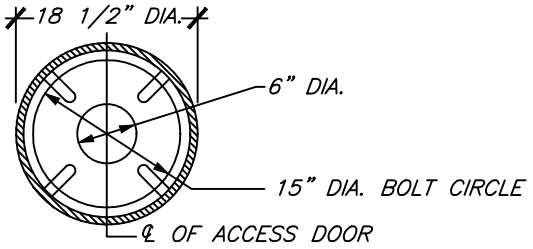

SECTION A-A

N.T.S.	DATE	REVISIONS	DRAWN BY	APPVD BY	STANDARD DETAIL
Village of DOWNERS GROVE FOUNDED IN 1832	02/20/07		D.J.G.		ORNAMENTAL POLE/ LIGHT FIXTURE STYLE B
	06/06/07	Per PSRT & Mike	D.J.G.	M.D.M.	
	03/25/11		S.A.V.	A.J.S.	
	01/01/18		N.R.H.	J.M.W.	

DRAWING NO. SLT-14

I:\LIBRARY\DETAILS\ELECTRICAL\SLT-14

NON GFI DUPLEX CIRCUIT OUTLET

SPECIFICATIONS

A 20 AMP, 125 VOLT, NON GFI DUPLEX CIRCUIT OUTLET RECEPTACLE SHALL BE MOUNTED IN THE STREET LIGHT POST OR PLANTER BOX. THE RECEPTACLE SHALL BE UL LISTED ACCORDING TO E-48380 AND UL 943 CLASS A AND UL498. THE RECEPTACLE SHALL HAVE A CAST ALUMINUM, LOCKABLE, UL LISTED COVER THAT IS SUITABLE FOR WET LOCATIONS WHILE IN USE AND COMPLIES WITH NEC ARTICLE 410-57(B). THE RECEPTACLE AND COVER SHALL MOUNT TO AN OUTLET OPENING, IN THE POST SHAFT, WITH A GASKET AND STAINLESS STEEL SCREWS.

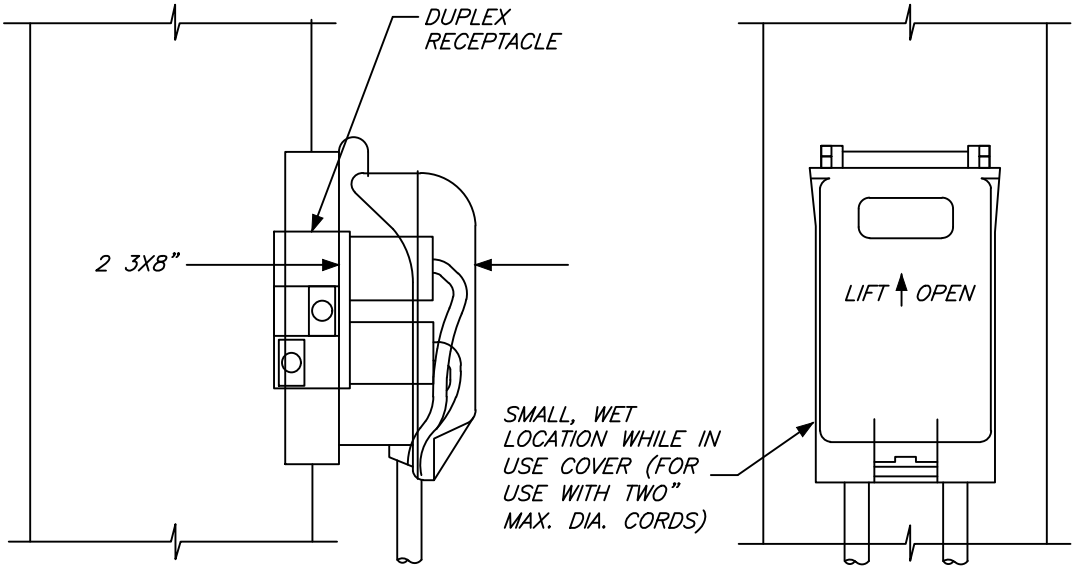

DUPLEX RECEPTACLE

N.T.S.	DATE	REVISIONS	DRAWN BY	APPVD BY	STANDARD DETAIL
Village of DOWNERS GROVE FOUNDED IN 1832	06/06/07		D.J.G.	M.D.M.	ORNAMENTAL POLE DUPLEX RECEPTACLE
	01/15/09		D.J.G.	M.D.M.	
	03/25/11		S.A.V.	A.J.S.	
	01/01/18		N.R.H.	J.M.W.	
	DRAWING NO. SLT-14				
	I:\LIBRARY\DETAILS\ELECTRICAL\SLT-15				